IOT BASED SMART PARKING SOLUTION WITH SUB GHz NODES IN A 6LOWPAN NETWORK

Loyd Lobo,Phoolchand Verma, Sarvesh Satardekar, R. S. Gad, G. M, Naik ; ALTERA SoC Laboratory Department of Electronics, Goa University, Goa.

Abstract- Urban commuting has become a nightmare for a common man who travels to and from work daily in a city. The traffic gets even worse on weekends, as almost half the road is occupied by cars searching for parking. To avoid these problems, recently many new technologies have been developed that help in solving the parking problems to a great extent using RFID technology, GSM, and QR code. In this survey paper, we discuss and analysis various smart parking solutions that are used to locate available parking space with the help of sensors. This saves customer's time as well as minimizes wastage of fuel. The growth in low-cost, low-power sensing and communication technologies is creating a pervasive network infrastructure called the Internet of Things (IoT), which enables a wide range of physical objects and environments to be monitored in fine spatial and temporal detail. There has been growing interest in the IoT for realizing smart cities, in order to maximize the productivity and reliability of urban infrastructure, such as minimizing road congestion and making better use of the limited car parking facilities. Some methodological framework for multiple steps ahead parking availability prediction includes the probability a free space to continue being free in subsequent time intervals, and the short-term parking occupancy prediction in selected regions of an urban road network.

Index Terms: (MEMS) Micro Electro Mechanical Systems technology,(IETF) Internet Engineering Task Force, (RFID)radio frequency identification.

I.INTRODUCTION

Currently, WSN (Wireless Sensor Network) is the most standard services employed in commercial and industrial applications, because of its technical development in a processor, communication, and low-power usage of embedded computing devices. The WSN is built with nodes that are used to observe the

Surroundings like temperature, humidity, pressure, position, vibration, sound etc. These nodes can be used in various real-time applications to perform various tasks like smart detecting, a discovery of neighbor node, data processing and storage, data collection, target tracking, monitor and controlling, synchronization, node localization, and effective routing between the base station and nodes.[1]

6LoWPAN defines that layering of IPv6 over low-power, low bandwidth, low-cost and small network by IEEE 802.15.4 standard. There are many main issues related to 6LoWPAN, including the IP connectivity, topologies, limited packet size, limited configuration and management, service and security discovery. [2]

Startup of 6LoWPAN [3]

The sequence of steps for startup of 6LoWPAN is as follows:

Step 1. **Commissioning**: First the link layer connectivity is established between nodes.

Step 2. **Bootstrapping**: After which the network layer addressing is configured. The neighboring nodes are discovered. And the registration is completed.

Step 3. **Route Initialization**: Finally, the setup of routing algorithms is executed to complete routes.

In recent research in metropolitan cities along with increase in population there is high vehicle density on roads. Hence this leads to annoying issue for the drivers to park their vehicles as it is

very difficult to find a parking slot. Parking guidance system is systems that obtains information about available parking spaces, process it and then present it to drivers by means of variables message signs. This system can be implemented in two ways, which are to guide drivers in congested areas to the nearest parking facility with empty parking lots. The latter guidance system addresses driver's need for information about the position and number of the parking lots that are actually available within a parking structure. This system reduces time and fuel while searching for empty parking lots and helps the car park to operate efficiently.[4]

With the introduction and integration of sub GHz rf modules low power modules with IPV6 based networking makes the application very firm in terms of power consumption , large number of cheap nodes in a network .

ST MICROELECTRONICS is one of the company which provides sub-1GHz solutions includes transmitters, transceivers and modules supporting a host of different applications in home and building automation (Smart Home and Smart City) as well as industrial process control (Smart Factory) and automated metering infrastructures (Smart Grid) or, more broadly, for the Internet of Things (IoT). Supported network operated in the license-free ISM and SRD frequency bands at 169, 315, 433, 868, and 915 MHz and several modulation schemes such as 2(G)FSK, 4(G)FSK, OOK and ASK.

ST transceivers also support advanced technologies such as frequency hopping, auto-acknowledgment and antenna diversity to secure error-free data transmission even in harsh-environmental or challenging-logistical conditions

Sub-1GHz modules, operating in IMS and SMD band, are based on transceivers and are equipped with antenna, xtal and balun. Modules are available with or without the host microcontroller for enhanced flexibility. They provide a ready to use solution, fully RF, ETSI, IC and FCC certified, that helps minimize time to volume.[5]

The report proposes an idea of implementing a smart parking solution in a 6lowpan network consisting of ST microelectronics sub1GHz nodes and a border router, where the status of the parking spot is determined by a motion sensor (like ultrasonic, PIR etc) and provided on a wide area network where a client(driver) can log in and get the status of vacant spaces available and park his vehicle without any hassle.

II.OVERVIEW

A. Wireless connectivity

Low-power wireless connectivity represents the key technology for connecting smart objects to the internet and the cloud. As a matter of fact, wireless connectivity is not dominated by one single technology. Depending on application needs or technology constraints, different hardware and software integration requirements must be considered. The chart below describes the main wireless connectivity schemes:-

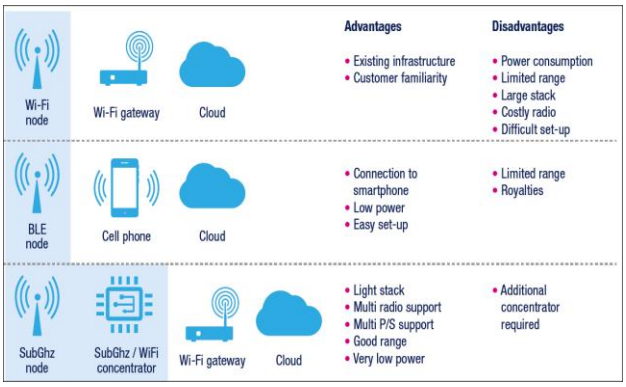

B. SUB1 GHz for 6lowPan based IOT applications:

6LoWPAN (IPv6 over Low-Power Wireless Personal Area Networks) is a communication protocol for transmitting IPv6 packets over low-

power wireless networks. It is specified by a working group of the IETF (Internet Engineering Task Force). It provides the capability for a wireless sensor network (WSN) node to be identified in the cloud by a unique IP address.

Contiki is an open-source operating system designed for the Internet of Things which implements an open-source version of the 6LoWPAN protocol. The Network layer contains the IPv6 (uIPv6) and the RPL (routing protocol for low-power lossy IPv6 networks) protocols. RPL provides efficient and dynamic routing paths for batteryoperated nodes. ContikiRPL is an open-source implementation of the RPL protocol. With mesh network devices relay messages for each other extending distance range to cover. The Mesh network is self-forming and self-handling. The 6LoWPAN layer acts as a bridge between the existing IPv6 network and the low-power nodes. 6LoWPAN offers a header compression and encapsulation format optimized for sending and receiving IPv6 packets over low-power radio communication networks by reducing the packet header overhead. The Data Link layer implements carrier sense multiple access with collision avoidance (CSMA/CA) and ContikiMAC, a radio duty cycling mechanism. ContikiMAC includes a sleepy router feature which extends the battery life of a mesh network's low-power nodes. To save power, nodes are switched off most of the time and are only woken up periodically to be able to receive and relay messages from other nodes.

The Industrial, Scientific and Medical (ISM) unlicensed frequency bands below 1 GHz are widely used by wireless communication systems mainly in industrial, home and building automation and automatic meter reading applications. The flexibility offered by national regulations inselecting physical layer characteristics such as output transmitted power, modulation scheme, data rate and channel bandwidth, together with the possibility to develop proprietary protocols lets users find the best solution for their needs as well as unmatchable performance and system efficiency at the expense of interoperability and development efforts. Moreover either a star or mesh network topology can be implemented and, in principle, without any limitations in the number of nodes connected simultaneously.
Based on sub-1 GHz systems, some standards target specific application cases. Such standards guarantee interoperability between nodes from different manufacturers or system providers, but at the same time achieve high protocol efficiency for the dedicated use case. Among others, the Wireless M-Bus is an open standard developed for very power efficient smart metering and Advanced Metering Infrastructure (AMI) applications and it is quickly spreading in Europe for gas, water and heat metering. Sub-1 GHz proprietary solutions are widely used for the wireless connection of nodes in home networks and building automation systems as well as in industrial process applications. Real-time monitoring and control of thousands of nodes enables process optimization, more efficient resource management, prevents breakdowns and saves energy (Smart Factory). Sub-1 GHz solutions are also used in the implementation of Smart City infrastructures where each wireless node is part of a network. Nodes are monitored and controlled and their data can be used for managing light, parking and traffic systems; saving energy and improving the quality of life. Thanks to the wireless coverage range, the efficiency and flexibility of the sub-1 GHz technology is one of the building blocks for enabling IoT growth, even if it requires an internet gateway for connecting to the IoT.

C. Reduction in energy consumption (eg: ST's SPIRIT1 low-power transceiver)

The SPIRIT1 is a sub-GHz transceiver intended for RF wireless-sensor node applications such as advanced metering infrastructure, alarm and security systems, home and building automation, industrial monitoring and control. It is designed to operate in ISM and SRD frequency bands at

169, 315, 433, 868, and 915 MHz, but can also be programmed to operate at other frequencies in the 300-348 MHz, 387-470 MHz, and 779-956 MHz bands. The air data rate is programmable from 1 to 500 kbit/s, and the SPIRIT1 can be used in systems with channel spacing of 12.5/25 kHz. The SPIRIT1 supports different modulation schemes: 2-FSK, GFSK, OOK, ASK, and MSK. Transmitted/received data bytes are buffered in two different three-level FIFOs (TX FIFO and RX FIFO), accessible via the SPI interface for host processing. The Spirit1 combines excellent radio performance with unbeatable current consumption. Additional embedded features include a "listen before- talk' (CSMA/CA) engine, AES-128 data encryption, error correction and detection, as well as a highly flexible and programmable data packet format which contributes to further reducing the computational load of the host microcontroller and the overall system current consumption. Moreover, the SPIRIT1 fully supports antenna diversity with an integrated antenna switching control algorithm.

Low current consumption:

- Shutdown: 2.5 nA
- Standby: 650 nA
- Sleep: 950 nA
- RX: 9 mA
- TX: 21 mA @ +11 dBm

III.PROPOSED SYSTEM

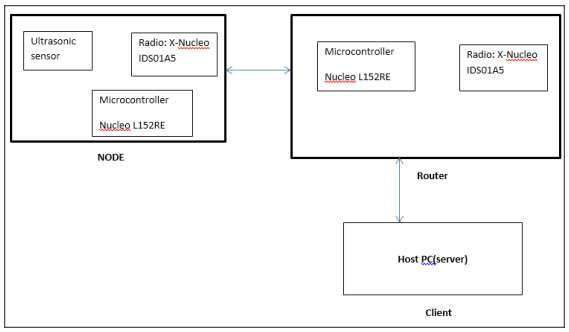

The above block is the representation of a simple yet smart parking system based on sub GHz RF nodes communicating in a 6lowpan network the ultrasonic sensor used detects the presence of the vehicle which updates the controller in the node. The controller verifies this information and sends it to the sever through the border router , where a client can simply login to the server and get the status of the data (i.e. the status of the available slot for parking) in form of a comfortable GUI.

IV.DEVICE HARDWARE

All the components needed for IOT based Smart Parking is been placed in parking lot. A mobile application is currently being designed to display the current status of parking lot. As shown in Figure

A. Microcontroller

STM32 microcontroller with LQFP64 package with two types of extension resources (Arduino Uno Revision 3 connectivity and STMicroelectronics Morpho extension pin headers for full access to all STM32 I/Os) . On-board ST-LINK/V2-1 debugger/programmer with SWD connector – selection-mode switch to use the kit as a standalone ST-LINK/V2-1 Flexible board power supply – USB VBUS or external source (3.3 V, 5 V, 7 - 12 V) – Power management access point Three LEDs – USB communication (LD1), user LED (LD2), power LED (LD3) Two push buttons: USER and RESET. Supported by wide choice of Integrated Development Environments (IDEs) including IAR™, Keil, GCC-based IDEs. In our application we have used the stm32L152re development board.

B. 6lowpan communication

STM32 Nucleo expansion board based on the SPSGRF-915. SPGRF-915 characteristics: 868 MHz ETSI-certified module based on low

power, low data-rate sub-1 GHz SPIRIT1 transceiver. Integrated Balun (BALF-SPI-01D3). Chip antenna. Compatible with STM32 Nucleo boards. Equipped with Arduino UNO R3 connectors. Scalable solution; capable of cascading multiple boards for larger system. Example firmware for point-to-point communication, compatible with STM32Cube firmware RoHS compliant

C. Sensing

Ultrasonic ranging module HC - SR0 provides 2cm - 400cm non-contact measurement function, the ranging accuracy can reach to 3mm. The modules includes ultrasonic transmitters, receiver and control circuit. The basic principle of work: (1) Using IO trigger for at least 10us high level signal, (2) The Module automatically sends eight 40 kHz and detect whether there is a pulse signal back. (3) IF the signal back, through high level , time of high output IO duration is the time from sending ultrasonic to returning. Test distance = (high level time×velocity of sound (340M/S) / 2.

V. Future work and applications

Smart parking management systems are capable of providing extreme level of convenience to the drivers. Here the nodes are placed in the parking lot which shows the status if the space vacant or not and accordingly we can park the vehicle. What happens exactly is whenever we are in search of parking spot we search for the spot by making use of smart app from Android/iPhone, this app shows the status if spot is available it is detected by the smart sensor node and the status is shown in green color and if its occupied then status is shown in red color. Space can be booked by paying the desired amount of money through online payment services for example Rs.100 per hour. Person can even pre book the space for his future use for which he/she will have to pay extra amount.

TABLEII: Component cost

Component (per 1000)	Cost ($)
Microcontroller: Nucleo L152RE	89.49
Radio: X-Nucleo-IDS01A5(sub-1GHz)	130.83
Sensor: Ultrasonic Ranging Module HC - SR04	3.85
Total Cost	224.17

Hundreds of sensors can be integrated making it a big smart system. And the app can be developed which will also enable most important techniques to provide all the possible shortage route for parking from any area of the city mainly, it helps to predict accurately and sense spot/vehicle occupancy in real-time.

VI. Reference:

1] Wireless Sensor Network Architecture and Its Applications by: Tarun Agarwal**.**

https://www.elprocus.com/architecture-of-wireless-sensor-network-and-applications/

http://www.jatit.org/volumes/Vol41No2/12Vol41No2.pdf

2]NURUL HALIMATUL ASMAK ISMAIL, 2ROSILAH HASSAN, 3KHADIJAH W. M. GHAZALI

Journal of Theoretical and Applied Information Technology 31st July 2012. Vol. 41 No.2

3] (3)C. Lakshmi Devasena

Indian Journal of Science and Technology, Vol 9(30), DOI: 10.17485/ijst/2016/v9i30/98730, August 2016

http://www.indjst.org/index.php/indjst/article/view/98730/72229

4]FINAL YEAR PROJECT blog by shamrazak

http://shamrazak.blogspot.in/2013/03/literature-review-this-chapter-is_25.html

5]http://www.st.com/en/wireless-connectivity/sub-1ghz-rf.html?querycriteria=productId=SC1845