DESIGN AND DEVELOPMENT OF SMART SOIL MONITORING SYSTEM BASED ON EMBEDDED TECHNOLOGY

Thesis submitted to Goa University

for the award of the degree of

Doctor of Philosophy

In

Electronics

By

Sulaxana R. Vernekar

Supervisor

Prof. Gourish M. Naik

Department of Electronics

Goa University, Goa - 403206.

September 2015.

CERTIFICATE

This is to certify that the thesis entitled "Design and Development of Smart Soil Monitoring System Based on Embedded Technology" submitted by Mrs. Sulaxana R. Vernekar, for the award of the degree of Doctor of Philosophy in Electronics, is the original and independent work carried out by her during the period of study, under my supervision. The thesis or any part thereof has not been previously submitted for any other degree or diploma in any university or institute.

Place: Goa University **(Prof. G.M.Naik)**
Date: Sept. 2015. **Research Guide**

DECLARATION

I hereby declare that the thesis entitled "Design and Development of Smart Soil Monitoring System Based on Embedded Technology" is my original contribution and the same has not been submitted on any occasion for the award of any other degree or diploma of any university or institute. To the best of my knowledge, the present study is the first comprehensive work of its kind in the area. The literature related to the problem has been cited. Due acknowledgements have been made to the sources wherever necessary.

Place: Goa University **(Sulaxana R. Vernekar)**
Date: Sept. 2015. **Research Student**

ACKNOWLEDGEMENTS

Words are insufficient to express my thanks and gratitude to all those people who have helped me directly or indirectly in the completion of my research work.

First and foremost, I would like to express my sincere thanks and gratitude towards my research guide Dr. Gourish M. Naik, Professor & Head, Dept. of Electronics, Goa University, whose able guidance and encouragement enabled me to complete my thesis. It has been a great pleasure to work under him. The sharing of ideas and thoughts, and the numerous discussions that we had during the course of work has been a great source of learning experience, inspiration and motivation to me.

I would also like to express my sincere thanks to Principal Shri P.M.Bhende, GVM's GGPR College of Commerce & Economics, Ponda-Goa, for supporting me in the completion of my research work.

I thank Dr. Rajendra Gad, Assoc. Professor, Dept. of Electronics, Goa University, who has initiated multivariate system analysis in the Goa University for which we are all indebted.

Dr. Jivan Parab, Asst. Professor, Dept. of Electronics, Goa University, has been a great source of motivation and support and I owe my special thanks to him for making me understand the concept of multivariate analysis and FPGA.

I acknowledge the inputs provided by Prof. A. V. Salkar (Dean, FNS) Prof. J. A. E. De Sa (former Dean, FNS) and Dr. Uma Subramaniam(member FRC) at various stages of my research work.

I am very much thankful to IngridAnne Nazareth for helping in the experimental stage of my research work and being there with me during the course of my research work. I also thank Narayan, Dr. Vinaya Gad and Noel Tavares for supporting me in my research endeavor. I also thank the office staff of Dept. of Electronics, William for his support. I would also like to sincerely acknowledge the support provided by Shri J.V Kamat and Shri A. Lopes from USIC, Goa University, in the construction of the soil sensor.

I take this opportunity to acknowledge my friend Samir M. Patil, for supporting and motivating me always.

A special thanks to all my friends and staff from GVM's GGPR College of Commerce & Economics, and to all my friends from the Dept. of Computer Science, Chowgule College for their constant support and encouragement.

I am greatly indebted to my son Gauraksh and my spouse Dr. Ramlal for supporting and encouraging me and for keeping the conditions at home conducive towards the completion of my research work.

I am also highly indebted to my parents for giving me the gift of life and for making me capable of what I am today.

I also thank all my other family members for supporting me to achieve my goal.

Finally, I thank the Almighty God for keeping me in good health and always surrounding me with people who have been a source of motivation to reach at this stage of my life.

Sulaxana R. Vernekar
September 2015.

TABLE OF CONTENTS

PREFACE

1. INTRODUCTION

1.1. Precision Farming in Developed Nations 2

1.2. Agricultural Scenario in India 7

1.3. Soil Sensing in Precision Farming 12

1.4. Importance of Soil Testing 14

2. REVIEW OF SOIL NUTRIENT SENSING METHODS

2.1. Laboratory methods of soil nutrient sensing 25

2.2. Rapid Soil Nutrient Sensing 27

2.3. Radio Frequency (RF) Techniques in Soil Sensing 34

2.4. Use of Spectroscopic Techniques 36

2.5. Objectives of the Study 37

3. METHODOLOGY

3.1. Soil Sensor Design 39

3.2. Soil Monitoring System Design 43

3.3. Network Analyzer 45

3.4. Scalar Network Analyzer (SNA) 47

3.5. Sample Preparation 53

3.6. Signal Processing 54

4. MULTIVARIATE DATA ANALYSIS

4.1. What is Multivariate Analysis? 55

4.2. Multivariate Calibration Model for Soil Monitoring System 59

4.3. Testing of the PLSR Based Model for Soil Urea Estimation 65

5. DESIGN OF FPGA SOFT CORES FOR SOIL MONITORING SYSTEM

5.1. DSP Processor or FPGA – Selecting a Hardware Platform 70

5.2. FPGA Architecture – Overview 73

5.3. Soft Core Processors for Embedded Systems 75

5.4. Altera NIOS II Soft Core for Soil Monitoring System 82

6. ANALYSIS AND RESULTS

6.1. RF Responses of the Soil Constituents 89

6.2. RF Spectra of Mixed Samples 94

6.3. Estimation of Urea using PLSR Technique 95

6.4. Conclusion 105

6.5. Future Scope 106

ANNEXURE

ANNEXURE I 109

ANNEXURE II 113

ANNEXURE III 125

REFERENCES 129

LIST OF TABLES

Table 1.1: Electrical and Electromagnetic sensing technologies

Table 1.2: Optical and Radiometric sensor technologies

Table 1.3: Mechanical sensor technologies

Table 1.4: Acoustic and Pneumatic sensor technologies

Table 1.5: Electrochemical sensor technologies

Table 4.1: Concentrations of various constituents of 16 different samples used in the calibration file.

Table 4.2: Samples used as unknowns for estimation of urea.

Table 4.3: Samples showing change in concentrations of NaCl.

Table 4.4: Samples showing change in concentrations of Potash

Table 4.5: Samples showing change in concentrations of Calcium

Table 4.6: Samples showing change in concentrations of Phosphate

Table 5.1: Comparison summary of DSP and FPGA

Table 5.2: Comparison of Processors

Table 5.3: Comparison between Altera DE boards

Table 6.1: Concentrations of various constituents of 16 samples used in the calibration file

Table 6.2: Results of Urea estimation

Table 6.3: NaCl concentration changing with all other components constant

Table 6.4: Potash concentration changing with all other components constant

Table 6.5: $CaCO_3$ concentration changing with all other components constant

Table 6.6: Phosphate concentration changing with all other components constant

LIST OF FIGURES

Figure 1.1: Contact EC sensor

Figure 1.2: Non-contact EC sensor

Figure 2.1: Principle of working of ISE

Figure 2.2: Basic difference between the construction of MOSFET and ISFET

Figure 3.1: Coils used in the design of soil sensor

Figure 3.2: Cell design based on 4 probe method

Figure 3.3: Frequency response of dielectric mechanisms

Figure 3.4: Schematic diagram of the designed cell

Figure 3.5: The designed cell

Figure 3.6: Block diagram of the Soil Monitoring System

Figure 3.7: Generalized block diagram of a network analyzer

Figure 3.8: Superheterodyne Spectrum Analyzer

Figure 3.9: FFT Spectrum Analyzer

Figure 3.10: SA44B Signal Hound Spectrum Analyzer

Figure 3.11: Front panel of TG-44A

Figure 3.12: Experimental Setup

Figure 4.1: Principle of reduction used in PCA

Figure 4.2: Flowchart of SIMPLS algorithm

Figure 4.3: RF spectra in the frequency range of 10-500MHz

Figure 5.1: DSP processor block diagram

Figure 5.2: parts of an FPGA

Figure 5.3: Design flow for an FPGA

Figure 5.4: LEON3 architecture

Figure 5.5: MicroBlaze processor

Figure 5.6: NIOS II Processor architecture

Figure 5.7: Architecture of OpenRISC 1200 Processor

Figure 5.8: Altera DE2 board

Figure 5.9: Screenshot of SOPC System Components Selection

Figure 5.10: Full system implementation

Figure 5.11: Summary of the total resources used in the system

Figure 5.12: Flowchart for the output display

Figure 5.13: Output display showing Urea is normal

Figure 5.14: Output display showing urea is above normal

Figure 5.15: Output display showing Urea is normal

Figure 6.1: RF response of urea for varying concentrations

Figure 6.2: RF response of NaCl for varying concentrations

Figure 6.3: RF response of potash for varying concentrations

Figure 6.4: RF response of Calcium Carbonate for varying concentrations

Figure 6.5: RF response of Phosphate for varying concentrations

Figure 6.6: RF spectra of different combinations (samples)

Figure 6.7: Chart of actual & estimated values of urea with the RMSE.

Figure 6.8: Chart representing the effect of change in NaCl values on urea estimation

Figure 6.9: Chart representing the effect of change in potash values on urea estimation

Figure 6.10: Chart representing the effect of change in $CaCO_3$ values on urea estimation

Figure 6.11: Chart representing the effect of phosphate values on urea estimation.

Figure 6.12: Flowchart for the output display

Figure 6.13: photographs of DE2 board LCD display

ABBREVIATIONS

AC – Alternating Current

ADC – Analog to digital Converter

ASIC – Application Specific Integrated Circuit

CEC – Cation Exchange Capacity

CLB – Configurable Logic Block

DMA – Direct Memory Access

DSP – Digital Signal Processing

DUT – Device Under Test

EC – Electrical Conductivity

FDR – Frequency Domain Reflectometry

FFT – Fast Fourier Transform

FIA – Flow Injection Analysis

FIS – Farm Information Systems

FPGA – Field Programmable Gate Array

FTIR – Fourier Transform Infra Red

GIS – Geographic Information Systems

GPR – Ground Penetrating Radar

GPS – Global Positioning System

HDL – Hardware Description Language

ICP – Inductively Coupled Plasma

IDE – Integrated Development Environment

ISA – Instruction Set Architecture

ISE – Ion Selective Electrode

ISFET – Ion Selective Field Effect Transistor

LCD – Liquid Crystal Display

LUT – Look Up Table

MIR – Mid Infra Red

MLR – Multiple Linear Regression

MOSFET – Metal Oxide Semiconductor Field Effect Transistor

NIR – Near Infra Red

OM – Organic Matter

PCA – Principal Component Analysis

PLSR – Partial Least Square Regression

PMMA – Polymethyl MethaAcrelate

RAM – Random Access Memory

RF – Radio Frequency

RMSE – Root Mean Square Error

SEP – Standard Error Prediction

SNA – Scalar Network Analyzer

SNR – Signal to Noise Ratio

TDR – Time Domain Reflectometry

UAV – Unmanned Aerial Vehicle

USB – Universal Serial Bus

Vis-NIR – Visible Near Infra Red

VNA – Vector Network Analyzer

VRT – Variable Rate Technology

PREFACE

This thesis is based on the "Design and Development of Smart Soil Monitoring System Based on Embedded Technology". The soil monitoring system is designed using Altera NIOS II soft core platform on the DE2 board having cyclone II as the target FPGA. The system is designed to estimate the urea value in a sample in the RF range of 10MHz – 500MHz. The system is developed using PLSR technique based on SIMPLS algorithm in C language.

Chapter I and chapter II of this thesis discusses about the various techniques used in soil sensing. The need to develop a rapid and accurate soil monitoring system is also discussed in these chapters.

Chapter III, is on the methodology and discusses the design of the smart soil monitoring system. Network analyzers and the sample preparation are also described in great details.

Chapter IV describes the Multivariate Data Analysis techniques and the building of PLSR model for the estimation of urea in a sample.

Chapter V discusses about the use of FPGA and the various FPGA currently available. It describes FPGA soft core processors design for soil monitoring system.

Chapter VI gives the results and the conclusion based on the results obtained and elaborates on the future scope of the work.

LIST OF PUBLICATIONS

Papers Presented in indexed Nat/Int Journals

1. International Journal of Electronics & Communication Engineering & Technology (IJECET), ISSN(O): 0976-6472, ISSN(P): 0976-6464, Vol.5 Issue 11, Nov. 2014, pp 33-36. "**Prediction of Soil Urea Content Using RF Spectroscopy and Partial Least Square Regression**". **Sulaxana R. Vernekar**, IngridAnne Nazareth, Jivan S. Parab, Gourish M. Naik.
2. International Journal of Advances in Engineering and Technology (IJAET), ISSN: 22311963, Vol.7, Issue 4, Sept. 2014, pp 1271-1274. "**Potash Estimation in Soil using RF Technique". Sulaxana R. Vernekar**, IngridAnne Nazareth, Jivan S. Parab, Gourish M. Naik.
3. International Journal of Electronics & Communication Engineering & Technology (IJECET), ISSN(O): 0976-6472, ISSN(P): 0976-6464, Vol.5 Issue 7, July. 2014, pp 32-38. "**Application of RF Spectroscopy for Blood Glucose Measurement**". IngridAnne P. Nazareth, **Sulaxana R. Vernekar**, Rajendra S. Gad, Gourish M. Naik.
4. International Journal of Pure & Applied Research in Engineering & Technology (IJPRET), ISSN: 2319-507X, Vol.2 (9), April 2014, pp 615-621. "**RF based soil urea analysis using multivariate system". Sulaxana R. Vernekar,** Jivan S. Parab, Gourish M. Naik.
5. International Journal of Advance Research in Computer Science & Software Engineering (IJARCSSE), ISSN(O): 2277 128X, Vol.4, Issue 8, Aug. 2014, pp 758-761. "**An Algorithm for Estimation of Blood Cholesterol Based on Regression Technique**". IngridAnne P. Nazareth, **Sulaxana R. Vernekar**, Rajendra S. Gad, Gourish M. Naik.
6. International Journal of Advances in Engineering and Technology (IJAET), ISSN: 22311963, Vol.6, Issue 6, Jan. 2014, pp 2686-2691. "**Radio Frequency Technique for Analysis of Urea Content in Soil". Sulaxana R. Vernekar**, IngridAnne Nazareth, Jivan S. Parab, Gourish M. Naik.
7. International Journal of Innovative Research in Electrical, Electronics, Instrumentation & Control Engineering(IJIREEICE) ISSN(O): 2321-2004, ISSN(P): 2321-5526, Vol.1, Issue 9, Dec. 2013, pp 413-417. "**Implementation of Analysis of Blood Glucose using Impedance Technique**". IngridAnne P. Nazareth, **Sulaxana R. Vernekar**, Rajendra S. Gad, Gourish M. Naik.
8. International Journal of VLSI Design, ISSN: 2229-3167, Vol.1 No.1, Jan-June 2010, pp 25-28. "**Precision Farming for High Yield: SOC based Low Cost Instrumentation**". **S.R.Vernekar**, J.S.Parab, R.S.Gad, G.M.Naik.
9. International Journal of VLSI Design, ISSN: 2229-3167, Vol.1 No.2, July-Dec. 2010, pp 57-59. "**Smart Sensors using Altera FPGA in Agro Electronics**". **S.R.Vernekar**, J.S.Parab, R.S.Gad, G.M.Naik.

10. International Journal of Innovative Research in Electrical, Electronics, Instrumentation & Control Engineering(IJIREEICE). "NIOS II Soft Core for Flash Based Matrix Manipulation". J.S.Parab, R.S.Gad, **S.R.Vernekar,** G.M.Naik. **To be published.**

Papers Presented in Nat/ Int Conferences

1. Presented a paper titled "**RF Spectroscopy Technique for Soil Nutrient Analysis**"at the **IEEE International Conference** on Technologies for Sustainable Development held at Don Bosco Institute of Technology, Mumbai, 4th Feb. 2015.
2. Presented a poster paper titled **"Soil Sensing – A tool for precision farming"** at the 4th Bharatiya Vigyan Sammelan, Goa on 5th – 9th Feb. 2015.
3. Presented a paper titled "**RF based soil urea analysis using multivariate system"** at the **2nd International Conference** on Emerging Trends & Research in Engineering and Technology, held at IBSS College of Engineering, Amravati on 29th March 2014.
4. Presented a poster paper titled "Design of RF absorption Measurement Cell for Soil Monitoring" at the 8h Annual National Symposium organized by Padre Conceicao College of Engineering, Verna-Goa held on 8th March 2014.
5. Presented a paper titled "Urea Analysis in Soil using FPGA based on Multivariate Algorithm" at the 7th Annual National Symposium organized by Parvathibai Chowgule College, Margao-Goa held on 23rd Feb. 2013.
6. Presented a paper titled "Application of FPGA for Soil Urea Estimation" at the 6th Annual National Symposium organized by Goa University held on 22nd March 2012.
7. Presented a paper titled "Use of Electronic Instrumentation in Precision Farming" at the 4th Annual National Symposium organized by Goa University held on 5th Feb. 2010.

Agriculture defined as the domestication of plants and animals is found to have originated around 10,000 years ago. Prior to this, human race relied on fishing, hunting and gathering food for nearly 2 million years of its existence. The origination of agriculture coincides with a period where lot of climatic and ecological fluctuations took place. It was also observed that during the same period the growth in population increased to around 0.1 percent per year. It is not very clear whether the growth in population was responsible for the spread of agriculture or agriculture was responsible for the growth in population.

Agriculture is the largest user of land and water in the world occupying almost 1/3rd of the land area. It forms an important section of a country's economy since it provides food and is a means of livelihood for the poor people of a country. Growth in agriculture can help poor countries in reducing poverty, which in turn can help in the economic growth of a country. The global population is expected to increase at around 9.3 billion by 2050. This has created new concerns regarding the ability of feeding the world in a sustainable manner. The demand for food is estimated to rise by 50 percent due to the estimated 27 percent increase in global population and 83 percent growth in income for the period 2005-2030. The use of crops for the production of bio-fuel and for other industrial use is also on the rise. Thus, these demands are going to have a significant effect on the limited agricultural resources available. Over the past five decades agricultural produce has increased significantly, thus making food affordable to many poor people in spite of an increase in the population. Worldwide production of grains such as wheat, rice and maize has almost tripled since 1960, thus resulting in the reduction of food prices. Technological innovations and use of inexpensive fossil fuels

has made it possible to increase agricultural production [1]. Green Revolution has helped significantly to increase the agricultural productivity, but due to high usage of chemical fertilizers and pesticides there have been signs of environmental degradation. Use of unsustainable practices in agriculture around the world, has resulted into its natural resource base getting damaged. In many of the developing nations, the main problems facing agriculture are soil erosion, scarcity of water and loss of habitat due to use of land for grazing, cropping and deforestation [2].

To meet the growing demands of agriculture for food and other industrial use, it needs to be practiced in a sustainable manner without putting any constraint on the already scarce resources. Agricultural productivity needs to be increased without any further damage to the environment through proper management of the available resources. Problems such as groundwater contamination, emission of greenhouse gases, drying up of groundwater table and soil degradation due to excessive use of chemical fertilizers, need to be tackled efficiently so that the future demands on agriculture are fulfilled. Traditional farming practices when combined with new technological tools can enable an increase in the crop productivity in a sustainable manner. Use of modern farming tools along with traditional tools has given rise to a new concept in agriculture called as Precision Agriculture.

1.1 Precision Agriculture

Traditional farming practices take into consideration the field as one whole unit and based on this, all the required inputs for crop production are applied. This results into either over use or under use of fertilizers and water, thus leading to environmental

degradation. Modern agricultural techniques consider a large farm to be made up of small units and accordingly apply the inputs based on local requirements. The technique of taking into consideration the spatial and temporal variability exhibited by soil within a field and the site specific management of resources is called Precision Agriculture or Precision Farming. With advancements in the field of information technology, it is possible to use various tools like Global Positioning Systems (GPS), data sensors etc. to get precise information regarding a particular location in a field and accordingly adjust the application of the inputs. This technique not only enhances the crop productivity and profitability, but also helps to utilize agricultural resources in a more sustainable manner.

Precision farming techniques are cost effective, can produce high yield and increase profitability, as compared to traditional agricultural practices which are time-consuming, labor intensive and expensive. But still there are some constraints on the implementation of precision farming techniques on a large scale. These constraints are the initial setup cost and unavailability of sensing systems which are fast and accurate [3]. Since precision farming is based on site specific decision making, precise information is a must for the decision making. Information related to soil such as moisture content, texture, physical and chemical composition, crop conditions, climatic conditions, etc. is very much essential in precision farming. The collection and processing of data in precision farming is done through the use of various technologies that are discussed as follows.

1.1.1 Global Positioning System (GPS) Receivers

GPS is a satellite based navigation system that provides precise, three dimensional positioning information in real time, while in motion under any weather conditions. GPS was originally developed for military use, but was later on made available to the public,

and lately farmers have been using it for site specific management of the farm. GPS allows creating maps of crops and soils. Use of GPS receivers enables the users to perform necessary action on that particular location of the field. GPS receivers may be either carried on field by the user or may be mounted on a vehicle for the identification of the site. GPS in combination with other technologies can be used in wide range of applications such as yield mapping, variable rate application, tillage adjustments, etc.

1.1.2 Geographic Information Systems (GIS)

GIS is used to manage and analyze site specific data related to crop productivity and other factors related to agronomy. It is a computerized system of storage and retrieval of data that integrates all types of information related to a field and interfaces this information with other decision support tools. Information such as yields, yield maps, soil survey maps, remote sensing data, crop data, soil nutrients, etc. are stored in the computer and through the use of procedures the information is processed and analyzed to produce maps. These maps are then used by farmers in the decision making. A large number of Farm Information Systems (FIS) are available that use simple software for creating a farm level database. One example of FIS is LORIS (Local Resources Information System) that enables the importation of data, and generates various maps like digital agro-resource map, operational map, etc. A GIS database application for farming can provide information on field topography, types of soils, soil testing, crop yield, irrigation and fertilizer and pesticides application rates.

1.1.3 Remote Sensing

Remote Sensing technology captures information about an object from a distance without making physical contact with the object. Remote Sensing system uses a sensor for acquiring the information of an object and a sensor platform for mounting the sensor which may be a hand held device or a satellite or an aircraft. Some spacecraft platforms currently being used are Indian Remote Sensing Satellites (IRS) and French National Earth Observation satellite (SPOT). Issues related to plant health due to various soil conditions like moisture content, nutrients, compaction etc. can be easily detected through the use of overhead images. Cameras with high spectral resolution are widely used to collect information from satellites. Infrared images captured by electronic cameras are found to have high correlation with healthy plant tissues. Factors causing crop stress can be easily identified through remote sensing, thus enabling the user to devise a site specific plan for the remedial action. Remote Sensing has a huge potential in precision agriculture since it can be used to monitor spatial variability with time at high resolution. The use of Remote Sensing is found to have some inherent limitations such as the need for instrument calibration, atmospheric correction, processing of images from air borne video and digital cameras. Remote Sensing technology can be successfully implemented in precision farming only if it has the following characteristics: low turnaround time (24-48 hours), high spatial resolution, high spectral resolution (<25nm), high temporal resolution (minimum 5-6 data per season), low cost of data (approx. Rs.100/acre/season) and the interpretation of results in simpler formats [4].

1.1.4 Variable Rate Technology (VRT)

Variable Rate Technology is based on yield maps that are used to form prescription plans for application of inputs for a specific site. It makes use of automated systems that are used in wide range of farming operations. Some of these operations include seeding, application of fertilizers and pesticides, etc.

1.1.5 Data Sensors

Various sensors are used to measure crop and soil related data such as humidity, crop health, texture, etc. Remote and proximal sensing technologies are widely used to generate high density data that provides field information. Remote sensing technologies use sensors placed on aerial systems or spacecrafts whereas proximal sensing technologies generate field information by placing sensors at a close range or in contact with field surface. Different technologies such as electrical, electromagnetic, photoelectric, ultrasound are used for the measurement of soil and crop parameters. The data collected through these sensors are analyzed using appropriate software and used in the decision making of variable rate application [5].

1.1.6 Precision Farming in Developed Nations

In developed countries farmers own large areas of land typically 10-100ha or more. Agriculture in these countries has shifted from the use of traditional methods to mechanized farming to the use of precision farming technologies. Farmers in USA and Canada started precision farming through the use of GPS technique with a yield monitor to generate yield maps. More recently the focus of precision farming has shifted towards

the use of variable rate applicators, through which the application of fertilizers, seeding and irrigation can be controlled.

In Europe, the development and advancement of precision farming is less as compared to USA. This is mainly because of the fact that the sizes of farms in Europe are relatively smaller. In case of Japan where the farm size is small, most of the researchers and the land owners have the perception that the use of precision farming technologies in small farms is not beneficial.

Although precision farming is widely used in developed nations, still its use is limited for various reasons such as the cost effectiveness, requirement of skilled manpower to handle large amounts of data and information. For a more widespread use of precision farming, there is a need to develop user friendly simulation models and decision support systems [6].

1.2 Agricultural Scenario in India

Agriculture is still considered as the backbone of Indian economy, even though its contribution to the overall GDP has decreased from 30 percent in 1990-91 to around 15 percent in 2011-12. This is because roughly half of Indian population is dependent on agriculture for its livelihood. A mere 1 percent growth in agricultural sector is found to be effective in reducing the poverty of a country as compared to the growth obtained in non agricultural sectors. Considering the fact that India has the largest number of poor and malnourished people in the world, agriculture plays an important role in the upliftment of these people, thus reducing poverty. The Green Revolution in India brought a great change in agriculture, but still India lags behind by two third of the world average in

terms of per capita food grain availability. Green Revolution was seen to be more effective in only five states of India namely, Haryana, Punjab, Himachal Pradesh, Madhya Pradesh and Uttar Pradesh which has a combined population of just 1/3rd of the country's population. Even though Green revolution in India has made it self sufficient in terms of food production, still it is far behind as compared to the world's highest productive countries. The negative impact of Green Revolution can be seen in terms of land degradation and environmental pollution. Of the total geographical area of 328.7 million ha, about 182 million ha is rendered to be non arable due to land degradation. India contributes to 17 percent of world population, with a geographical area of 2.5 percent, 4 percent of carbon emission, 1 percent of gross world product and a 2 percent of world forest area. This shows that the availability of natural resources in India is limited and needs to be utilized in a sustainable manner. Therefore, the need for implementation of precision farming in India is urgent. This will not only help in the increase of crop productivity, but will also enable the farmers to use sustainable practices in agriculture, thus enabling efficient utilization of resources [7, 8].

Precision Farming is still in its developmental stage in most of the developing countries, though it is widely being practiced in developed countries. The challenges that lie ahead of India in the implementation of Precision Farming are: small land holdings which may not be cost effective for implementing precision farming, lack of proper infrastructure, lack of skills and technical knowledge and lack of initiatives by the government. Various agricultural universities in the country through different projects are trying to study the feasibility of precision farming in India. The Tata Kisan Kendra (TKK) under the auspices of Tata Chemicals (TCL) has initiated the concept of Precision

Farming by providing extension services to farmers. Remote sensing technologies are used for soil analysis, gather information regarding crop health, pest attacks and in the prediction of final crop yield. The extension services provided by TKK help the farmers to adapt quickly to the changed conditions, which results in the yield of healthier crops, higher output and income to the farmers. TKK also provides loans and insurance for crops against natural disasters [9].

Tamil Nadu Agricultural University in collaboration with the State Government started the drip irrigation project in 2004-05 initially for an area covering 250 acres, extended to 500 acres in 2005-06 and 250 acres in 2006-07. The results showed that it not only reduced the water and fertilizer usage but also increased in higher crop yields. The Space Application Center, Ahmedabad in collaboration with the Central Potato Research Station at Jalandhar, Punjab started a project to study the role of Remote Sensing to map the soil variability in terms of space and time. Similarly, the Indian Agricultural Research Institute conducts various experiments to study the feasibility of Precision Farming. Experiments on variable rate input application in different cropping systems have been started by Project Directorate for Cropping Systems Research (PDCSR) Meerut and Modipuram in collaboration with Central Institute of Agricultural Engineering (CIAE), Bhopal. In Tamil Nadu, a village has been adopted by M.S. Swaminathan Research Foundation, Chennai in collaboration with NABARD for conducting experiments on variable rate input application [7].

1.2.1 Agriculture in the State of Goa

Goa located on the west coast of India is the smallest state spread over an area of 3.61 sq.km. Goa is surrounded by Sahyadri mountains on the east and the Arabian sea on the

west and shares its boundary with Maharashtra on the north and Karnataka on the east and the south. Goa was ruled by Portuguese for nearly 450 years and was liberated in 1961. Tourism and mining are the main industries supporting Goa's economy. The agricultural sector in Goa provides livelihood to around 12 percent of the population. There are some major changes in the agricultural sector in Goa from the last 50 years of liberation. Agriculture was the main occupation of nearly 70 percent of the population at the time of liberation which has been reduced to just 12 percent. Paddy was the main crop followed by cashewnut and coconut. The cropping pattern since then has changed with cashew being cultivated in nearly 55000ha, paddy covering around 31000ha and coconut cultivation covering an area of around 25100ha. Horticultural crops are also gaining popularity due to its high return and lower risk involved. Apart from these crops, pulses and groundnuts are also cultivated [10].

Goa has different types of soils ranging from red lateritic in lowland and uplands, sandy in the coastal areas and mostly alluvial along the riverbanks. Soils in Goa have unique characteristics and a varying fertility status. Around 81percent of the soil is lateritic having good amount of nitrogen and organic matter but poor in potash, phosphorous and lime. They are also highly acidic and well drained. Around 8 percent is alluvial and loamy found along the riverbanks and the remaining 11 percent is sandy. These soils are also highly acidic and are found to be deficient in potash and phosphorous but have sufficient amount of organic matter. The soils and weather of Goa support a wide range of crops and vegetation [11].

1.2.2 Precision Farming in The State of Goa

The Directorate of Agriculture, Government of Goa, Indian Council of Agricultural Research (ICAR), Goa, Zuari Agro Chemicals Ltd., are some of the institutes that have taken an initiative in the implementation of precision farming in the state of Goa. The Directorate of Agriculture has a number of ongoing projects that can help farmers to improve the quantity and quality of the crop yield. Some of the ongoing projects are as listed below[12]:

- Setting up of agro services that can provide assistance to farmers related to machinery and infrastructure.
- Promotion of combines for paddy harvesting
- Soil and nutrient mapping
- Assistance for use of soil conditioners/ soil amendments
- Assistance for use of soil micronutrients
- Mechanization in agriculture

The ICAR has also initiated projects in the state for the betterment of farmers. Some of these are as follows:

- Demonstration of precision farming technology in banana, papaya and pineapple.
- Development of comprehensive e-agriculture portal for information and knowledge sharing in Goa.
- Soil Test Based Recommendation program- software package that prescribes the amount of fertilizers to be used based on the soil fertility reports and the crop yield target. It also estimates the cost involved [13].

Zuari Agro Chemicals Ltd. have started a program for farmers titled Goa Agriculture Initiative (GAIN) with the aim of making agriculture in Goa self sufficient and resilient. The farmers are provided support in terms of assisting the farmers to adopt right technologies so as to increase their farm outputs [14].

1.3 Soil Sensing in Precision Farming

Soil is an important natural, non-renewable resource on which agriculture is based. Soil is a complex site-specific system which shows wide variations with space and time. The concept of soil health is very important for the sustenance of agriculture. Healthy soils function as a balanced living system and are capable of sustaining plant and animal production, can maintain and enhance the quality of air and water and can promote the healthy living of animals and plants. Therefore, soil can be considered as the basis of an agro-ecosystem of a nation for the production of food, feed, fiber and fuel. The quality of soil changes with time either because of natural events triggering the change or because of human activities. Though the quality of a soil with regards to its physical, chemical and biological properties is dependent on the climatic and ecosystem of a particular location, the maintenance and the enhancement of the soil quality can be in the control of the landowner [15].

1.3.1 Components of Soil

Soil consists of four important parts- mineral solids, water, air and organic matter. Mineral solids in the form of sand, silt and clay consists of silicon, oxygen, aluminum, calcium, potassium and magnesium. The soil water which consists of dissolved nutrients is the main source of nutrients for the plants. The air provides oxygen to the roots and

removes excess carbon dioxide from root cells. The minerals and organic matter combine together to form aggregates which create a soil that contain more pores for water storage and gas exchange [16].

Soil fertility depends on the physical, chemical and biological characteristics of a soil. For example, water retention capacity of the soil, organic matter content, texture, acidity all these factors contribute to the fertility of soil. Plants need at least sixteen elements for its growth and completion of its life cycle. Plant growth is basically a complex process wherein the synthesization of water, solar energy, carbon dioxide and nutrients take place. Carbon, hydrogen and oxygen are the non mineral elements supplied through air and water and are required in large amounts as compared to the other 13 elements. The remaining 13 elements are utilized by plants in the form of minerals supplied from the soil or externally through fertilizers. The amount of nitrogen, potassium and phosphate required for plant growth is sufficiently large and are called as primary nutrients. The other less intensively used nutrients also called as secondary nutrients consist of sulphur, calcium and magnesium. Apart from these soil consists of large number of micronutrients such as chlorine, manganese, zinc, iron, boron, molybdenum and copper which also influence the plant growth. These nutrients although in very small amounts are essential for the proper functioning of plant metabolism. Plant growth can be hampered in the absence of these nutrients whereas if present in large amounts can be toxic to both the plants as well as its consumers. All these nutrients are taken up by plants from the soil either through their roots or through their leaves. Factors such as soil pH, microbial activity, and chemical properties of the elements present in the soil and the physical

conditions of the soil such as aeration, moisture, temperature and compaction determine the availability of nutrients to the plants [17].

1.4 Importance of Soil Testing

Plants synthesize the nutrients available in soil along with the other elements for its growth. Continuous crop production reduces the reserves of nutrients required for plant growth in the soil. Thus, proper soil nutrient management is required so as to replenish the soil with the lost nutrients for continuous plant growth. This not only helps in the conservation of soil but also helps in preventing economic inefficiency and damage to the environment.

In a soil nutrient management program, soil testing and proper interpretation of results form an important tool. Periodic assessment of soil to study its condition is very important in agriculture for the production of healthy crops. The conventional soil testing method involves taking soil samples from a field to a laboratory and doing the analysis. Based on the results a soil report is generated. There are certain limitations on using the laboratory testing such as different laboratories use different approaches in the interpretation of results and recommendation of fertilizers. Also, these methods are time consuming, costly and labor intensive. Hence the conventional soil testing methods are being slowly replaced with real time soil sensors that combine information from other sources and generate a soil testing report. These are fast, portable and cost effective. Since the principle of precision farming is based on site specific management, these sensors are effective in generating the soil reports at a much faster rate. Also, the number of samples for testing can be quite large as compared to the conventional methods, thus

giving more accurate soil reports. Various researchers around the world are developing soil sensors that can be effectively used in precision farming. Some of these sensors are commercially available, while some are still in the research stage. Based on the principle of working of these soil sensors, they can be broadly classified as follows:

1.4.1 Electrical and Electromagnetic Sensors

These sensors are based on the ability of a medium to conduct current or store electrical charge that can affect the behavior of an electrical circuit. The soil acts as a conducting medium and depending on the physical and chemical composition of soil, the circuit behavior changes, which can be used for measuring the required output. These sensors are used for the measurement of soil Electrical Conductivity (EC), from which various other soil parameters, can be measured through correlation. Two techniques are used for soil EC measurements: contact and non-contact.

In case of contact measurement, electrodes are used through which current from a source is injected into the soil. The voltage drop between the source and sensing electrode is measured which depends on the conductivity of the soil. The effective measurement depth depends on the distance between the two electrodes, thus by using more than two electrodes it is possible to measure multiple depths simultaneously. The working principle of contact sensor is as shown in figure1.1.

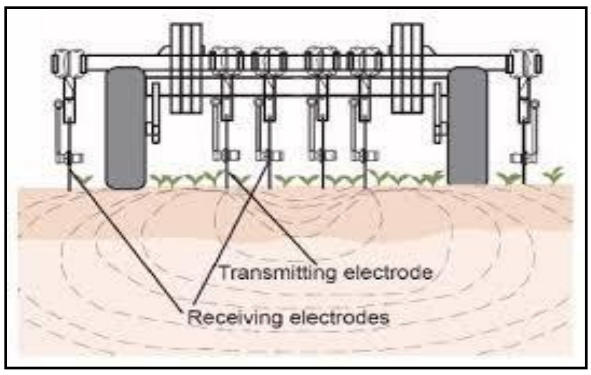

Figure 1.1: Contact EC sensor (Source: ohioline.osu.edu)

The non-contact EC sensor works on the principle of electromagnetic induction and uses two coils placed just above the soil surface. An Alternating Current (AC) signal passing through the transmitting coil induces current into the soil, which induces a secondary current into the receiving coil. The depth up to which an effective measurement can be taken depends on the how the coils are oriented and also on the distance separating the two coils. These sensors are commercially available and are found to give fast response, durable and low cost. They are widely used for on-the-go soil EC mapping. Figure 1.2 shows the working principle of non-contact.

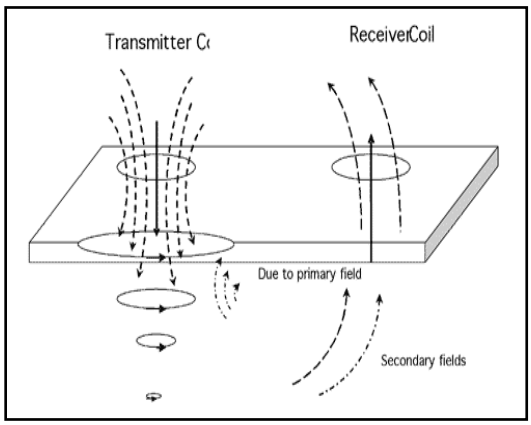

Figure 1.2: Non-contact EC sensor (Source: ohioline.osu.edu)

Studies for the comparison of contact and non contact EC sensors are conducted by various researchers [18-20]. Similarities in map patterns and high correlation between collocated points were reported. A study conducted on electrical conductivity measurements obtained through non contact electromagnetic induction sensor showed that the operation speed and height, topsoil depth, soil moisture and temperature and also the drift in instrumentation has a significant effect on the measurements [21]. The heterogeneous nature of soil in a field can be observed through the measured values of electrical conductivity or resistivity. The measured values are found to be affected by various soil parameters such as salinity, texture, organic matter content, soil moisture content and depth of clay pan [22]. Since a single measurement is not sufficient to predict several properties simultaneously various researchers have attempted multiple measurements. A study conducted using laboratory testing method for simultaneous measurement of soil conductive and capacitive properties showed that through the application of frequency response analysis, soil moisture and salinity can be separated r^2 as 0.73 and 0.56 respectively [23]. A similar study conducted under controlled soil density and depth conditions obtained r^2 values for soil moisture and salinity to be 0.88 and 0.83 respectively [24]. Capacitance and dielectric based measurements were used for determining soil moisture content in another study [25]. A sensor for on-the-go measurement of soil moisture was developed in the form of a tine shape, which showed that 84 percent of the sensor variance is because of differences in moisture content [26]. The electrical and electromagnetic sensing technologies can be summarized as shown in table 1.1.

Table 1.1: Electrical and Electromagnetic Sensing Technologies.

Sr. No.	Working Principle	Development status	Results	References
1.	Contact based EC sensors (use of spike wheels or rolling coulters)	Commercial implements available, numerous research projects	Soil texture determination gives the best result. Stable filed patterns obtained, indirect prediction of soil nitrate, effects of organic matter, moisture and salinity.	[27] [28] [29]
2.	EC sensors based on Electromagnetic Induction (non contact)	Commercial implements available, large number of research projects	Stable field patterns having high correlation with contact sensors. Effect of operational speed and height of measurement.	[30]
3.	Capacitance and EC contact sensor	Laboratory testing under controlled conditions	Can measure soil salinity and moisture simultaneously	[31]
4.	Capacitance contact sensor	Field tests, commercial circuits available	Measurements can be correlated with volumetric moisture content	[32]

1.4.2 Optical and Radiometric Sensors

These sensors are based on the measurement of the amount of absorption, reflection or transmission of light by or through a medium under study. In agriculture, these sensors use soil as the medium and the spectral response obtained is used to characterize some component of soil. Spectroscopic techniques in the near infrared (NIR), mid infrared (MIR) and visible regions are widely used for the characterization of soil. Studies have shown that the effect of various soil properties in different spectral regions changes by certain degree and hence these sensors have the potential of using a single sensor for studying several effects. Using optical sensors soil properties like organic matter, CEC, soil moisture, various minerals like nitrogen, calcium etc. can be estimated. Radiometric sensors include microwave sensors and Ground Penetrating Radar (GPR) and are found

to have potential applications in the measurement of soil water content and the geophysical soil structure. GPRs can be used to map soil properties like organic matter, soil texture, thickness and depth of soil horizons and water tables which means they have the potential in management of water resources. Visual and NIR spectral response of soil have been successfully used in the prediction of soil properties like texture, organic matter, CEC etc. with the application of appropriate data analysis techniques. Some researchers have also successfully correlated soil chemical properties like soil nitrate and pH with the soil reflectance. Thus, optical and radiometric sensors provide a rapid and non destructive approach in the characterization of various soil properties. Instruments using GPR and spectrometers in the visual and NIR range are commercially available. The technologies used for optical and radiometric sensors can be summarized as shown in table 1.2.

Table 1.2: Optical and Radiometric Sensor Technologies

Sr. No.	Working Principle	Development status	Results	References
1.	Subsurface soil reflectance sensor. Single wavelength.	Field tests.	Correlation with organic matter for same soil type. Interference of soil moisture	[33]
2.	Hyperspectral visual and NIR soil reflectance sensor	Lab. Studies, field tests, commercial spectrometers, data processing algorithms	Correlation with soil EC, pH & nutrients. Correlated to OM, texture, moisture & CEC.	[34-36]
3.	Hyperspectral visual & MIR soil reflectance sensor	Laboratory test	Soil nitrogen correlation with mineral Na.	[37]
4.	Microwave sensor	Theoretical study	Correlation with soil moisture	[38]
5.	GPR	Field tests, commercial installments available	Correlation with soil moisture, studies in geophysical soil lab.	[39]

1.4.3 Mechanical Sensors

These sensors are used to obtain the mechanical characteristics of soil such as compaction. Compaction in soil may occur due to natural process of drying and wetting or it may be due to human induced causes such as the use of heavy farm machinery and inappropriate choice of tillage systems. Compaction makes the soil particles to come closer to each other which reduce the air permeability and water infiltration in the soil. This results into restricted root growth rate and restricted accessibility to nutrients for the plants, thus resulting into reduced crop yield. Measurement of compaction is done by finding the resistance of soil to penetration through the use of a standard vertical cone penetrometer. Cone penetrometers are time consuming and produce highly variable results and hence cannot be used in real time systems. Alternative methods like strain gauge and load cells are used to measure forces acting on tillage tools. These methods are found to be ideal for using in real time systems as they are fast, robust and inexpensive and can be easily interfaced with data acquisition systems. The various technologies used in the development of soil mechanical sensors are summarized in table no. 1.3.

Table 1.3: Mechanical Sensor Technologies

Sr. No.	Working Principle	Development status	Results	References
1.	Mapping using draft force	Commercial implements available in most modern tractors	Can be used to infer pre-tillage conditions	[40,41]
2.	Use of load transducers to measure total draft	Commercial field mapping, field tests	Correlation with compaction for specified texture and moisture	[42]
3.	Single depth horizontal penetrometer	Field tests	Correlation with cone penetrometer	[43]
4.	Use of an array of load cells and independent horizontal soil penetrometers	Field tests, Commercial field mapping	Determination of soil mechanical resistance at varying depths, correlation with vertical cone penetrometer	[44-46]
5.	An implement for deep tillage using load cells and strain gauges	Preliminary field tests	Depending on the variation of soil mechanical resistance with depth can provide real-time correction of tillage depth	[47]

1.4.4 Acoustic and Pneumatic Sensors

These sensors can be used as an alternative approach for differentiating soil physical and mechanical characteristics to electrical, electromagnetic, mechanical, optical and radiometric sensors. Acoustic sensor measurements can be used to correlate soil texture and compaction. These sensors consist of a shank having a rough surface and a hollow cavity which is equipped with a microphone that records the sound produced through the interaction of soil and the shank. Based on the frequency of recorded sounds, soils can be categorized. Pneumatic sensors are based on the pressure required to force a given flow of air into the soil. The sensor consists of an air injector that is placed in direct contact

with the soil and the resulting air pressure and flow are compared with the air permeability. This sensor can be used for the detection of changes in soil compaction, moisture content and soil texture. They are still under study and commercial implements are not yet available. The technologies used in the development of acoustic and pneumatic sensors along with their developmental status are summarized in table no.1.4.

Table 1.4: Acoustic and Pneumatic Sensor Technologies

Sr. No.	Working Principle	Development status	Results	References
1.	Soil shank equipped with microphone	Soil bin tests	Results found to have correlation with soil clay content	[48]
2.	horizontal cone penetrometer equipped with microphone	Soil bin tests	Detection of plow pan depth through correlation with cone penetrometer	[49]
3.	Air pressure transducer	Field tests	Based on the structure/compaction, moisture and soil type, separation of different tillage treatments	[50]

1.4.5 Electrochemical Sensors

These sensors are widely used in the measurement of soil chemical properties. They are based on the measurement of potential difference between a sensing electrode and a reference electrode, produced due to the activity of targeted ions. Ion Selective Electrodes (ISE) and Ion Selective field Effect Transistors (ISFET) are two widely used electrochemical sensors for the measurement of soil pH and soil nutrient content. Conventional laboratory testing methods for soil chemical analysis have been making use of ISE's from a quite a long time and are found to be quite accurate in their measurements. ISFET's are relatively new as compared to ISE's and are much better than

ISE's in terms of small size, fast response, better signal-to-noise ratio, low output impedance and the possibility of integrating several sensors on a single electronic chip. The limitation of electrochemical sensors is that the time required for the sensing electrode to reach equilibrium with measured soil or soil solution is quite significant, thus limiting the use of these sensors in real time sensing. Also, the sample preparation may be quite tedious if the laboratory methods of testing are to be replicated in a real time measurement system. The prototype development for these sensors is quite complex and are still under study. Only pH sensors using this technique are currently commercially available [51]. The electrochemical sensors used for soil sensing along with their current status is summarized in table no. 1.5.

Table 1.5: Electrochemical Sensor Technologies

Sr. No.	Working Principle	Development status	Results	References
1.	Ion selective electrodes for direct measurement of ion activity	Commercial implements available, field tests	Correlation with residual nitrate content, soluble potassium, and pH, on the go soil pH mapping commercially available	[52,53]
2.	Rapid extraction of soil cores	Laboratory tests	Potential for reducing lag time between sample collection and sensor output	[54]
3.	Sampling, conveying, extracting and measuring unit	Field and laboratory tests	Correlation with nitrate content, required hardware improvements	[55]
4.	Ion-selective field effect transistors (ISFETs) with flow injection analysis	Laboratory tests	Correlation with soil nitrate concentrations,	[56]

A large number of soil sensors are being developed to provide real time measurements of various soil properties. Though commercial implements of some of the sensors are available, they do not provide direct measurement of a specific soil property. Commercial implements of electrical and electromagnetic soil sensors are used in the generation of EC maps on the go and can be used to find heterogeneity existing in a field. These maps can be used in controlling the inputs applied to the field. Researchers are currently focusing on the development of systems where multiple sensors are integrated on to a single unit. The data obtained from these multiple sensors can be used in the prediction of selected soil attributes and can support site specific management.

Plants get the essential nutrients required for its growth from the soil. Deficiency in any of these nutrients in the soil can hamper its growth. Hence the soil needs to be tested periodically for the availability of nutrients to the plants. As and when the deficiency of any of the nutrients is encountered in the soil, external fertilizers are used to supply the deficit amount of a nutrient to the soil. The application of fertilizers has increased the crop yields considerably, but the uniform rate of application of fertilizers has done considerable damage to the environment. Therefore, soil nutrient testing forms an important tool in farming. Though conventional soil testing methods provide accurate results, they are found to be unsuitable in precision farming since they are time consuming and costly. Also, the number of samples required for testing the spatial variability of a field is limited in conventional testing since the cost increases with increase in the number of samples. Therefore methods which are fast, portable, cost effective, and which can provide results with considerable accuracy are essential in precision farming.

2.1 Laboratory Methods of Soil Nutrient Sensing

A large number of laboratory methods are used worldwide in soil testing laboratories to determine the soil properties. These methods are time tested and provide accurate results. A number of chemical procedures are available for the chemical analysis of soil, along with a number of alternative procedures also available for the detection of each soil element. Some of these methods are discussed in the following sections.

2.1.1 Instrumentation and Analytical Methods

Laboratory testing of soil nutrients is done through the use of automatic analyzers and soil extractants. Nitrate is measured in a laboratory using automated ion analyzers. Inductively Coupled Plasma (ICP) spectrometers are widely used in soil testing laboratories because of their ability to measure from a single sample, multiple elements like potassium (K) and phosphorous (P) simultaneously [57, 58]. The ICP spectrometer measures the intensity of a light at a particular wavelength when the electrons from a higher energy state return back to a lower energy state. Another alternative method for the determination of P in laboratories is the use of colorimetric spectrophotometer which is based on the absorbance at a specific wavelength. Similarly K can also be determined using Atomic Absorption Spectrophotometer which measures the amount of light passing through an atomic vapor of K at a specific wavelength [59].

2.1.2 Soil Extractants

A large number of soil extractants are used for the determination of nutrients in the soil. The commonly used extractants in soil testing laboratories for phosphorous are Bray P_1, Mehlich III, and Olsen. Bray P_1 is found to be more suitable for extraction of P in acidic soils whereas Olsen is found to be useful in calcareous soils. Mehlich III has gained wide popularity as it can be used to extract not only P and K, but also other elements such as Mg, Zn, Ca and Na [60].

2.2 Rapid Soil Nutrient Sensing

Techniques for rapid soil nutrient sensing that are commercially available or under study can be broadly classified to be based on two approaches of measurement. These are the optical sensing and electrochemical sensing approaches.

2.2.1 Electrochemical Sensing

The use of electrochemical sensing in the monitoring of soil chemical composition has been of considerable research. Researchers worldwide are trying to develop proximal soil sensors that are based on electrochemical sensing technique. This technique uses either the Ion Selective Electrodes (ISE) technology or the Ion Selective Field Effect Transistor (ISFET) technology. Both ISE and the ISFET produce an output voltage that is related to the concentration of specific ions between the sensing and the reference electrode.

i. Electrochemical Sensing using ISE

ISE are used as the sensing electrode in the system which makes use of either a glass or a polymer membrane for sensing the activity of particular ions in the soil. Depending on the concentration of ions of a nutrient under study a voltage potential is developed between the electrodes. The ISE sensors are also called as potentiometric sensors. These sensors can be used directly in an unfiltered soil solution and are found to be relatively cheaper and require minimal hardware support. Hence they can be considered as a viable option in the development of proximal soil sensing. Figure 2.1 shows the ISE sensor.

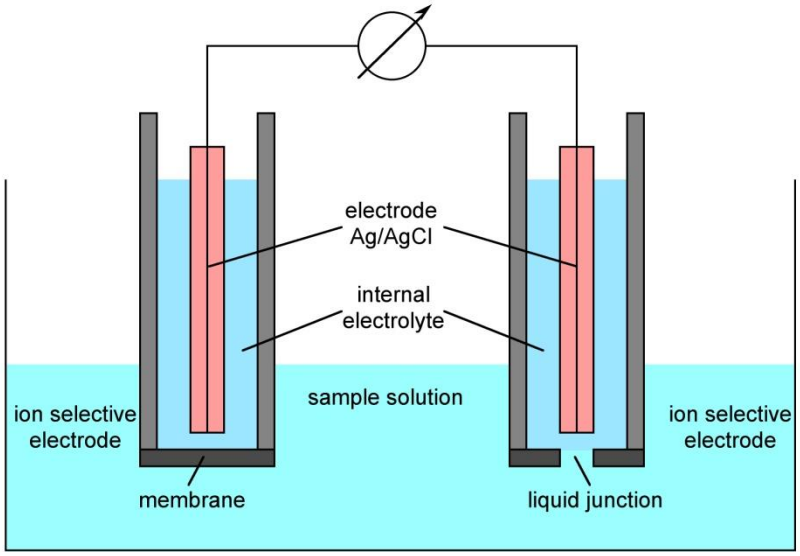

Figure 2.1: Principle of working of ISE

A study on the use of nitrate ISE was demonstrated for the rapid determination of nitrate in soils. The results showed that nitrate could be detected with a lower limit accuracy of 1-2ppm which was found to be suitable in the rapid detection of soil nitrate [61]. The use of ISE and extracting solutions for determining nitrate at lower concentrations in the soil was studied, however the results were produced using the laboratory test method and not in real time and this method was not found suitable for the development of on-the-go soil sensor [62]. Since 1990, there are several studies that are reported on the use of ISEs in the real time monitoring of the soil nutrients. A tractor mounted field monitoring system was developed that could measure nitrate levels in the soil. It was tested both in laboratory and on field, but the results of field test were not able to produce repeatability [63]. The above system was redesigned to remove its shortcomings. Laboratory test results showed that nitrate could be predicted with 95 percent of accuracy, but the system had very high levels of noise in the electrode signals

[64]. Another system for the measurement of soil pH rapidly was developed with the use of pH electrode. The results showed high correlation r^2 between the output measured using the electrode and the reading obtained using standard laboratory testing method [65]. A system for the mapping of soil pH was implemented based on the above work, where glass electrode was used for measuring the soil pH and the system used a microcontroller that controlled the rinsing of the pH electrodes and data communication. The results obtained showed a correlation r^2 equal to 0.7972 between the sensor readings and the laboratory measurements [66]. A laboratory study conducted to evaluate the feasibility of using K^+ and NO_3^- ions in moist soil samples showed that error levels in the measurement of K^+ and NO_3^- ions were same as that of pH, but showed a relatively lower accuracy than soil pH when considering the total field variability [67]. A study using sensor array with three different ISE electrodes was reported for the laboratory evaluation of simultaneous analysis of soil macronutrients. The results obtained showed similar concentration of soil NO_3 measurements with those obtained using standard laboratory measurement methods with r^2 equal to 0.89. With P ISE, the concentration measurements obtained were 64 percent lower than those obtained using standard laboratory methods and with K ISE, it was found to be 50 percent lower than those obtained using standard methods of testing. However, it was suggested that these issues can be corrected with the use of proper correction techniques [68].

ii. Electrochemical Sensing using ISFET

ISFET works on the same principle as ISE with the metal gate in FET being replaced with the ion selective membrane. Depending on the concentration of specific nutrient ions a voltage potential is developed that acts as a gate source in the FET. The amount of current flowing between the drain and the source is controlled by the ion concentration in the sample solution. Figure 2.2 shows the ISFET.

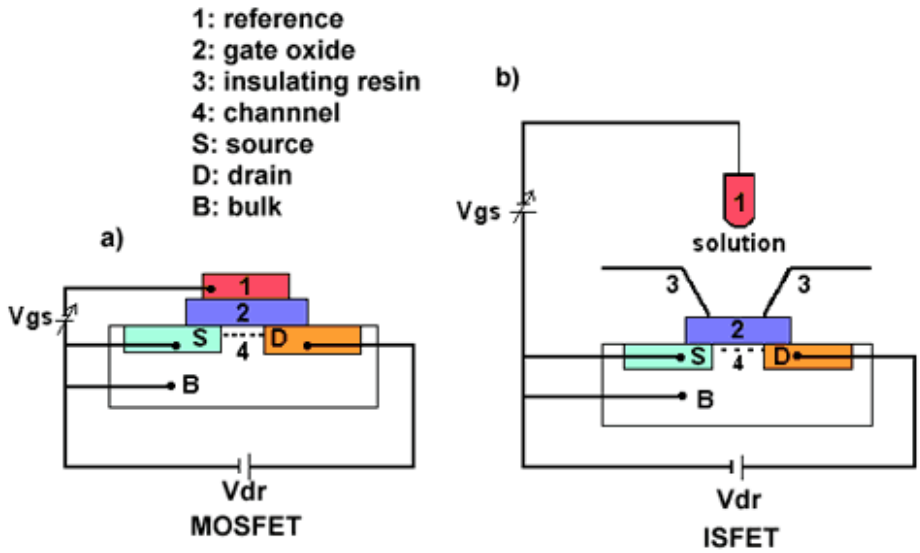

Figure 2.2: Basic difference between the construction of MOSFET and ISFET
(Image Source: www.snipview.com)

Both ISE and ISFET make use of ion selective membranes that can be used for sensing many of the soil nutrients such as NO_3, Mg, Ca, P, K and Cl [69]. The ISFET has several advantages over ISE such as smaller dimensions, fast response, high signal-to-noise ratio, low output impedance and the most important one is the integration of several sensors on a single chip.

Various researchers have shown the use of ISFETs in real time measurements of soil nitrate in combination with soil extraction and Flow Injection Analysis

(FIA) system. The results show a potential for the development of real time soil nitrate measuring system using the ISFET/FIA combination [70-73]. A direct soil measurement approach for the measurement of soil pH, K, NO_3 and Na was investigated which showed r^2 values to be ranging from 0.93 to 0.96 for soil pH, 0.41-0.51 for soil NO_3, 0.1 for Na and 0.61-0.62 for soil K [74].

Although ISE and ISFETs are found to be feasible for nutrient sensing in soil, there are still certain limitations of these sensors for their use in real time measurements. The limitations are : slower response of these sensors because of the delay caused in reaching equilibrium of the sensing electrode with the soil solution, preparation of soil samples and the extraction of nutrients for testing is tedious which increases the complexity and the response time of the sensor. Apart from these, the sensors require frequent recalibration depending on the type of soil being tested and have a very short life. Therefore, there is a need to address these issues in order to commercialize the use of these sensors.

2.2.2 Optical Sensing

Optical sensing involves the measurement of the amount of light that is absorbed or reflected by the soil nutrient ions. The use of Infrared (IR) spectroscopy has been a subject of considerable research worldwide so as to find its feasibility in the rapid sensing of soil nutrients. With development of statistical tools for the multivariate analysis of the spectra obtained, spectroscopic techniques are gaining wide popularity for the analysis of large number of soil properties. Studies in the visible and near infrared (NIR) have been extensively carried out for the quantification of soil properties. A study in the NIR region was carried out for the determination of nitrogen N wherein the concentration of N was

varied between 0-300 mg kg^{-1}. Fast Fourier Transform (FFT) and Partial Least Squares Regression (PLSR) analysis was used for the determination of soil nitrate. It was found that the Standard Error prediction (SEP) was fairly high (6-38mg kg^{-1} of nitrate) [75]. The simultaneous estimation of water content, organic carbon and N in air dried soils was carried out by using multiple linear regressions in the NIR region. A significant difference was found in SEP between finely ground soils (<0.25mm) and coarsely ground soils (<2mm). The estimation of soil N and organic carbon was also found to be relatively poor with the use of NIR technique [76]. In another study the use of NIR spectroscopy using principal component regression analysis for the estimation of various soil properties like moisture content, organic C, N and Ca with acceptable accuracy was demonstrated [77]. A study was carried out for a limited range of soils in Southern New Wales in the rice growing regions to demonstrate the applicability of NIR to predict various soil properties like pH, CEC, Ca, Mg and Na [78]. A good application of NIR spectroscopy was demonstrated with the use of a real time spectrophotometer which included a NIR unit mounted on a large tine. This arrangement made possible real time sensing to a depth of 0.15m. It was possible to estimate soil nitrogen N, organic matter, clay content and soil pH [79, 80]. Studies on the use of visible and near visible reflectance spectroscopy are also reported but are restricted to a few frequencies. Further it is found that the sensors using these frequencies need to be recalibrated for different types of soils and for different landscapes. A large number of ground based sensing systems are developed, but have limited applications in the sensing of plant attributes especially for the nitrogen status [81, 82]. Fourier Transform Infrared (FTIR) in the mid infrared region was used for the measurement of nitrate content in soil solutions. PLSR

analysis was used for the estimation of nitrate [83]. Wavelet spectral analysis based on mid infrared FTIR-ATR spectroscopy was used for the estimation of soil nitrate wherein two different soil types were tested, the results showed a high SEP when measuring low concentration of soil nitrate and also the type of soil had a significant effect on the measurements [84]. No studies are recorded on the exclusive use of ultraviolet (UV) spectroscopy, however studies related to the use of UV in combination with visible and IR spectroscopy techniques are found. The use of UV-Vis-NIR spectrophotometer was demonstrated in a study for the measurement of spectra of 420 soil samples collected from five different fields in Canada. Multiple linear regression models were used for the analysis and the results showed a strong correlation with r^2 ranging from 0.73 to 0.89 between the actual organic carbon and the predicted organic carbon [85]. Another study demonstrated the use of UV-Vis-NIR for the sensing of P concentrations in a soil sample. The study used 345 soil samples and Partial Least Squares (PLS) was used for the analysis of the data. The results showed higher values of r^2 and lower values of Root Mean Square Error (RMSE) in the prediction of soil P [86]. A considerable amount of literature is available on the use of Vis-NIR and MIR spectroscopy in soil sensing. The MIR region is found to contain more information on the mineral and organic composition of soil since the fundamental frequencies of molecular vibrations lie in this range, whereas the Vis-NIR region contains the overtones and the combinations of these frequencies. Hence multiple linear regression techniques used in the MIR region are found to produce good results as compared to Vis-NIR region [87]. A large number of implements using Vis-NIR spectroscopy in the form of portable instruments have been developed for soil sensing [88-90].

Though a large number of studies are carried out on the use of infrared and visible spectroscopy in combination with various signal processing techniques, the results are not satisfactory for the estimation of soil nutrients to decide on the correct amount of application of fertilizers. The limitation on the use of optical sensing techniques for soils is the interrelation between various soil properties such as soil texture, mineral composition, organic matter and moisture content that influence the soil spectra obtained. Also, the spectra obtained provide information about the soil only up to a depth of few microns whereas information up to a depth of 30cm provides the necessary information about the soil composition.

2.3 Radio Frequency (RF) Techniques in Soil Sensing

The use of RF technique in soil sensing is limited to the development of sensors for soil moisture content and salinity measurements. Studies based on the measurement of dielectric constant of soils at various frequencies and relating it to soil moisture content and salinity are available in literature. Some of the latest studies based on RF that are reported are: the development of soil water content sensor based on the change in capacitance at high frequency that uses two electrode probes. Depending on the moisture content of the soil, the dielectric constant changes which in turn changes the equivalent capacitance of the probes. The output voltage of the sensor is thus dependent on the change in the equivalent capacitance of the probe. A linear correlation with r^2 equal to 0.989 was observed between the output voltage and the soil volumetric moisture content [91]. A biodegradable soil sensor is under development at NDSU (North Dakota State University), which is a small chip sensor that is able to measure soil properties. It consists

of RFID tag through which the CPU is charged and is able to communicate real time data on soil such as salinity, moisture content and chemical composition of soil. The data logger attached to a tractor or UAV is used for collecting data from the sensor and makes use of cloud for storing the data. The c2sensor is biodegradable and has a life of approximately two years [92]. A study on the variation of dielectric constant based on the physical parameters of soil at C band microwave frequency was reported which showed that the dielectric constant has significant positive correlation with sand and bulk density of soil and a significant negative correlation with silt, clay and porosity of soil [93].

Soil sensors based on coaxial impedance dielectric reflectometry for the measurement of soil moisture uses an oscillator to generate a signal. This signal is then transmitted into the soil using probes. The ratio of the amplitude of the reflected signal and the incident signal is used to calculate the impedance which in turn is used to determine the moisture content in soil. Stevens Hydra Probe works on this principle and is commercially available.

2.3.1 Frequency Domain Reflectometry (FDR)

FDR sensors working on the basic principle of dielectricity use an oscillator to generate a signal which is transmitted to the soil with the help of a metal tine or a waveguide. The difference between the frequency of the incident signal and the reflected signal is measured. The moisture content in soil is thus determined based on the measurement of the difference in frequency. FDR probes are found to provide accurate readings, but require to be calibrated each time depending on the type of soil. The response time of these sensors is fast. The output obtained from the sensor can be

connected to a data logger for further processing. Some commercially available sensors based on this principle of working are the AquaSpy C-probe and Sentek EnviroScan probe.

2.3.2 Time Domain Reflectometry (TDR)

TDR sensors also use the dielectric principle and work by propagating a pulse signal into the soil, through a probe that is terminated at the end with a waveguide. The time taken by the pulse to return back is measured which is used to determine the soil moisture content. The calibration of TDR probes need to be done properly so that the time taken by the pulse to return back is accurately measured. TDR sensors are highly sensitive to soil salinity and are relatively costly as compared to other sensors, but the response time of these sensors is much faster when the moisture content of the soil varies considerably. Commercially available soil sensors based on TDR are Campbell CR 616 and IMKO Trime [94].

Studies found in literature use RF techniques that are based on the dielectric constant measurement of soil at varying frequencies for the determination of soil moisture content and salinity.

2.4 Use of Spectroscopic Techniques

The use of spectroscopic techniques in the estimation of soil properties has been demonstrated since 1970's [95]. Various methods using spectral analysis have been proposed for the measurement of the soil properties. Methods that are based on the physical and analytical characteristics of the signal and chemometric based empirical methods provide good effective predictability. Therefore, the relation between soil

properties and soil absorption can be used to develop regressions using field and laboratory data for calibration. Spectroscopic techniques are found to be faster, can provide real time measurements and are of low cost, as compared to conventional methods and hence are found to be more suitable when there are more samples and analysis to be done. Also, unlike laboratory testing methods which require sample pre-processing and the use of chemical extractants, spectroscopic techniques can be used directly, thus saving on cost and time [96]. There are no studies mentioned in literature which make use of RF spectroscopy for the estimation of soil nutrient content.

Thus, taking into consideration the advantages of using spectroscopic techniques the problem of developing a soil monitoring system using RF spectroscopy based on the dielectric principle was formulated. The thesis emphasizes on the design and development of the sensor and the use of embedded platform to make it portable, real time and user friendly system through the use of DSP algorithms.

2.5 Objectives of the Study

In order to meet the global requirements of increased crop productivity and sustainable agriculture, there is an urgent need to develop soil sensors which are fast, accurate, user friendly and portable. The problem was formulated keeping in mind the conditions of Indian farmers. Farmers in India are mostly small farmers who are poor, have limited or no access to information resources in farming and are technically incompetent to make use of the modern gadgets used in farming. This research study is being undertaken with the main objective of developing a fast, portable, user friendly and cost effective soil monitoring system to analyze the fertility status of the soil.

The objectives of the research study are as follows:

1. To study the existing technologies of soil testing and suggest a better technique which is user friendly for the farmers.
2. Design a dielectric cell for testing the samples response at RF frequencies for various soil nutrients.
3. To make the system user friendly as well as reprogrammable for changed environmental conditions.
4. Programming the developed soil monitoring system for user friendly interface with LCD display to indicate various soil parameters.

The proposed design of the soil monitoring system consists of a soil sensor that provides output in the form of RF spectra and the signal processing unit used for the estimation of an unknown concentration of a particular soil constituent. To obtain accurate estimations, it is required that the soil sensor must be immune to any external electromagnetic interference. The RF spectra obtained from the sensor must have a high SNR to obtain the relevant information of a particular soil nutrient.

3.1 Soil Sensor Cell Design

Various techniques such as electromagnetic, electrical, electrochemical, radiometric and optical as discussed in the previous chapters are available for the design of a soil sensor. The current work is based on RF spectroscopy and as such various designs based on HF coils, four probe method were tried which are discussed in the following sections.

3.1.1 Design using HF coils

The soil sensor was initially designed to work on the non contact principle. A HF voice coil was used for inducing current into the soil. The influence of the soil on the induced current is determined by measuring the magnitude of the output signal. It was observed that there was no significant difference between the amplitudes of the input and output signals which indicated that the coil was not able to induce sufficient current into the soil. The voice coil was replaced with coils wound on ferrite core and the results were found to be similar to that of voice coil. A low power signal generator of frequency up to 2.2 MHz was used for inducing the signal into the soil, but it was observed that in order to induce sufficient current into the soil, a high power instrument is required. Since the basic objective was to design a user friendly and portable instrument, this design had to

be discontinued because of the requirement of high power oscillator. The coils constructed for inducing current into the soil are as shown in figure 3.1.

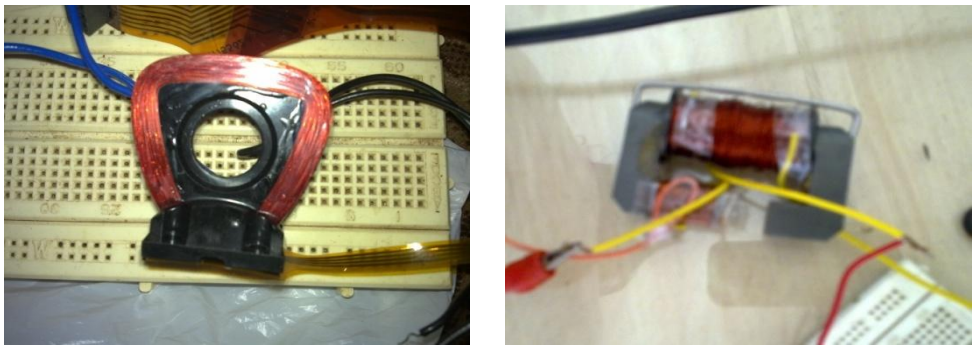

Figure 3.1: Coils used in the design of soil sensor

3.1.2 Design using 4 probes

Due to the non availability of high power oscillator the non contact method using coils had to be discontinued. A new sensor based on the contact method using 4 probes was designed. The soil sensor is a rectangular cell made of acrylic sheets with four electrodes. Two electrodes were placed at the opposite ends of the cell and two electrodes were placed at the centre of the cell. The sample to be tested was placed in the cell. The input signal was applied between the outer two electrodes and the output response was obtained between the inner two electrodes. The designed cell is as shown in figure 3.2.

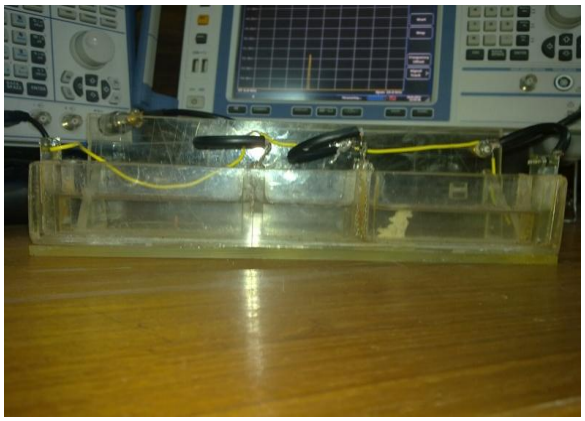

Figure 3.2: Cell design based on 4 probe method

The sensor response for the sample under test was found to be unsteady. This may be due to the attenuation in the signal caused because of the cable length and also due to the presence of large number of signals present in the surroundings used in wireless communication. At high frequencies the wavelength becomes comparable with the length of the cables being used which results into the cables acting as radiators at high frequencies. Loss of signal takes place due to its radiation into free space, thus giving an unsteady response. Thus taking into consideration all these factors the sensor design was changed which was based on the dielectric principle.

3.1.3 Design Based on Dielectric Principle

The soil sensor was redesigned and reconstructed to work on the dielectric principle. Dielectrics are materials that conduct electricity only to a certain degree. The dielectric properties of a material determine its behavior under the influence of electric field. The speed of propagation of an electromagnetic wave through a medium depends on the electromagnetic characteristics of the medium. In case of free space the electromagnetic wave travels with the speed of light. The propagation of electromagnetic wave through

any material is controlled by two factors: the magnetic permeability and the electrical permittivity. In soil, the propagation of electromagnetic wave is a function of electrical permittivity since soil is non magnetic. The electrical permittivity is frequency dependent and various dielectric mechanisms contribute to the overall permittivity of a material. The frequency response curve of various dielectric mechanisms is as shown in figure 3.3.

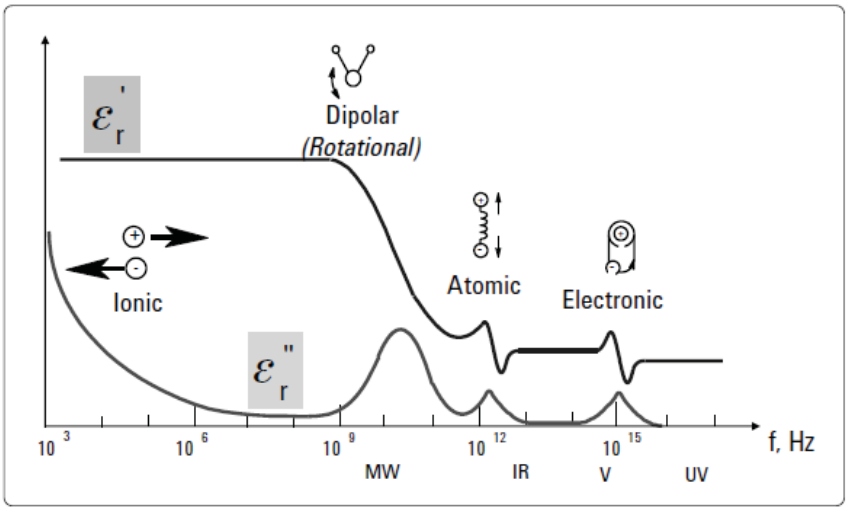

Figure 3.3: Frequency response of dielectric mechanisms
(Source: "Agilent-Basics of Measuring the Dielectric Properties of Materials, Application Note")

The frequency response of dielectric mechanisms shown in figure 3.3 is plot of frequency in Hz v/s attenuation in dB. Each of the dielectric mechanism shown in figure 3.3 has a characteristic cutoff frequency. The magnitude and the cutoff frequency are unique for each dielectric mechanism for different materials [97].

The sensor is based on the measurement of the loss in the RF signal transmitted through the soil sample placed in the sensor. The soil sensor is a cell fabricated using PMMA sheets and has a rectangular shape with the outer dimensions as 13cmx2cmx2.5cm. The inside surface of the cell is lined with gold foil and the outer surface of the cell is covered with a copper foil. Both the inside gold foil and the outer

copper shield are connected together through the feed connectors so as to provide the necessary shielding effect. A wire made of gold runs through the centre of the cell and is connected from the input feed connector to the output feed connector. The cell holds the samples for which the RF spectra are to be recorded. The schematic diagram of the cell is as shown in fig. 3.4 and the constructed cell is as shown in fig. 3.5.

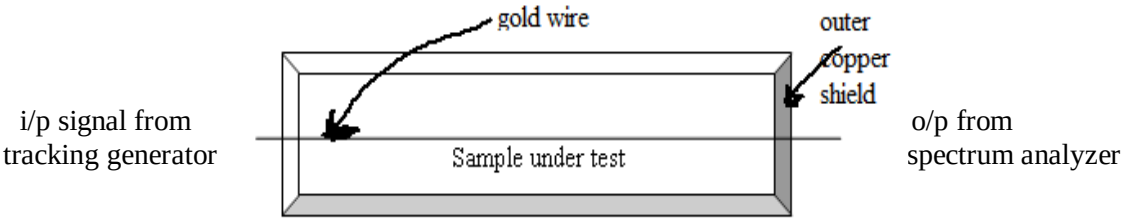

Figure 3.4: Schematic diagram of the cell

Figure 3.5: The constructed cell

3.2 Soil Monitoring System Design

The Block diagram of the proposed design for Soil Monitoring System is as shown in Figure 3.6.

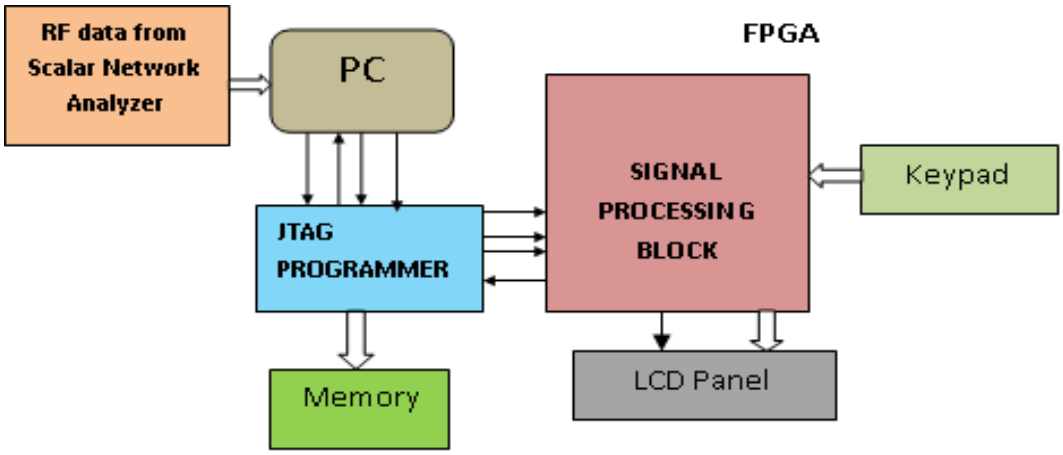

Figure 3.6: Block diagram of the Soil Monitoring System

The design consists of RF data obtained from Scalar Network Analyzer fed as input to Altera DE2 board with target as NIOS II processor running on CYCLONE II FPGA. The RF data is obtained from the soil sensor connected between a tracking generator and a spectrum analyzer.

The central gold wire in the cell (soil sensor) carries an RF signal towards the receiver end, during which the signal radiates into the sample which is absorbed as per the characteristics of the sample. Thus, the cell which consists of the central wire, the outer copper shield and the sample forms a dielectric loss cell. The signal strength starts reducing as it propagates through the central wire from the input feed connector to the output feed connector of the cell. Due to the above, the output signal is proportional to the absorption loss of the sample solution and is captured by the RF spectrum analyzer connected at the receiver end of the cell. Signal Hound USB-TG44A tracking generator and Signal Hound USB-SA44B spectrum analyzer are used with both the instruments working in the frequency range of 1Hz-4.4GHz.

3.3 Network Analyzer

It is an instrument used for the analysis of a circuit or a device under test at RF or microwave frequencies. A network analyzer can be used for the measurement of both the amplitude and phase characteristics of a device over a wide range of frequencies. It is used in the study of the linear and non linear behavior of both passive and active devices. The block diagram of a generalized network analyzer is shown in fig. 3.7.

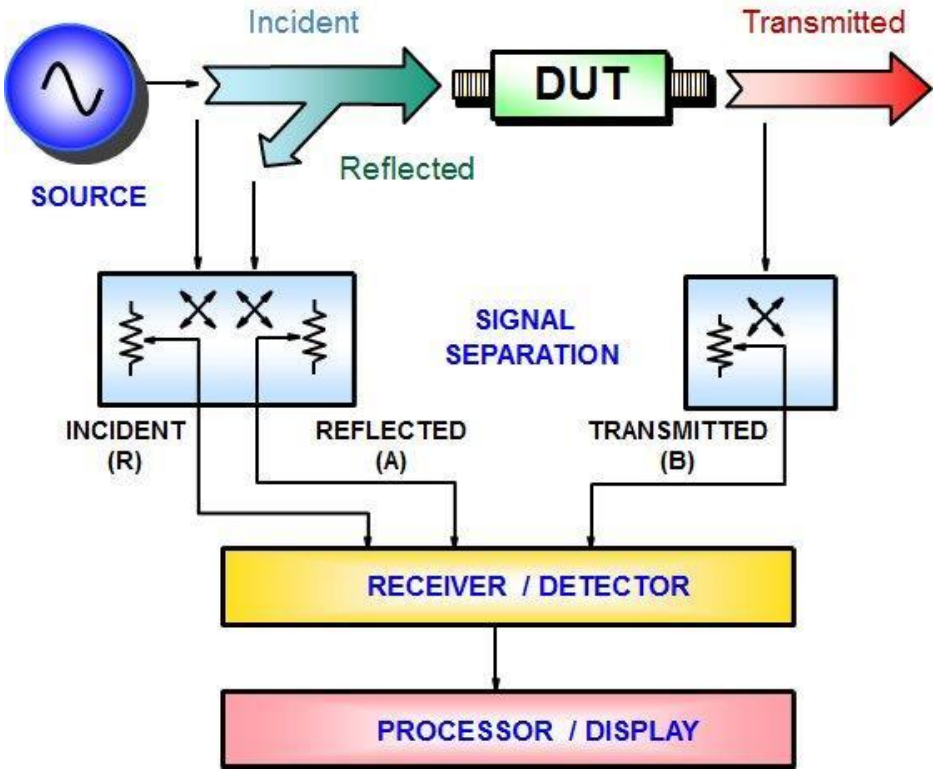

Figure 3.7: Generalized block diagram of a network analyzer

(Source: www.rf-mw.org)

The block diagram of a network analyzer is divided into four sections. The first section consists of the signal source which is required to activate the device under test (DUT). This section makes use of integrated synthesized sources that provide a very high frequency resolution and stability. The signal separation section needs to perform two basic functions. The first function is the measurement of a part of the incident signal that

is used to provide a reference. Generally, splitters or directional couplers are a part of the signal separation block. The second function that it performs is the separation of the incident signal and the reflected signal at the input of the DUT. Either couplers or bridges are used to perform this function. The next section of the network analyzer is the signal detection block which uses either a diode detector or a tuned receiver. The last section which forms an important block in the network analyzer is the display or processor section. In this section, the data is formatted in such a way that it is easily interpretable. The display may be provided in various formats such as markers, limit lines, pass/fail indicators, linear/log formats and grid/polar/smith charts.

Network analyzers can be classified into two types based on the types of measurements it can do, the Scalar Network Analyzer (SNA) and the Vector Network Analyzer (VNA). The SNA is used when only the amplitude characteristics of a circuit or a device under test are required in the study. The VNA is used to measure high frequency characteristics of both active and passive devices in their linear mode of operation. The network parameters called as S-parameters are measured as a function of frequency. The S-parameters provide an accurate representation of the linear behavior of the device under test. The applicability of VNA can be extended to measure noise parameters and the non linear characteristics such as compression and inter modulation through the addition of extra hardware.

A VNA can not only perform the functions of SNA, but it can also provide additional information such as the phase characteristics of devices with much more accuracy and over a greater dynamic range. The phase information can be used to provide new features for complex measurements such as Smith charts, group delay and time domain [98, 99].

3.4 Scalar Network Analyzer (SNA)

In this study SNA is used, since it involves the measurement of only the amplitude characteristics of the sample under test. Though VNA provides readings with much more accuracy as compared to SNA, the cost of VNA is much higher than SNA. Since the main objective of the research work is to design a portable, low cost soil monitoring system, the SNA was preferred over VNA.

The scalar network analyzer consists of a tracking generator and a spectrum analyzer that measures the amplitude properties of the sample under test. The tracking generator generates a sweep signal that has the same frequency as that of the signal received by the spectrum analyzer. The spectrum analyzer generates a frequency response that shows variations in amplitude of the received signal at various frequencies.

3.4.1 Spectrum Analyzer

A spectrum analyzer can be designed to work on two different principles, the superheterodyne principle and the Fast Fourier Transform (FFT) principle. In the case of FFT spectrum analyzer, a signal in the time domain is digitized using digital sampling and is processed using the FFT method to get the signal in the frequency domain. In the case of the superheterodyne or the swept tuned analyzer, the full frequency range required for the analysis is swept across, displaying all the frequency components present. The working of both the types of spectrum of analyzer is discussed below.

i) Superheterodyne or The Swept Frequency Spectrum Analyzer

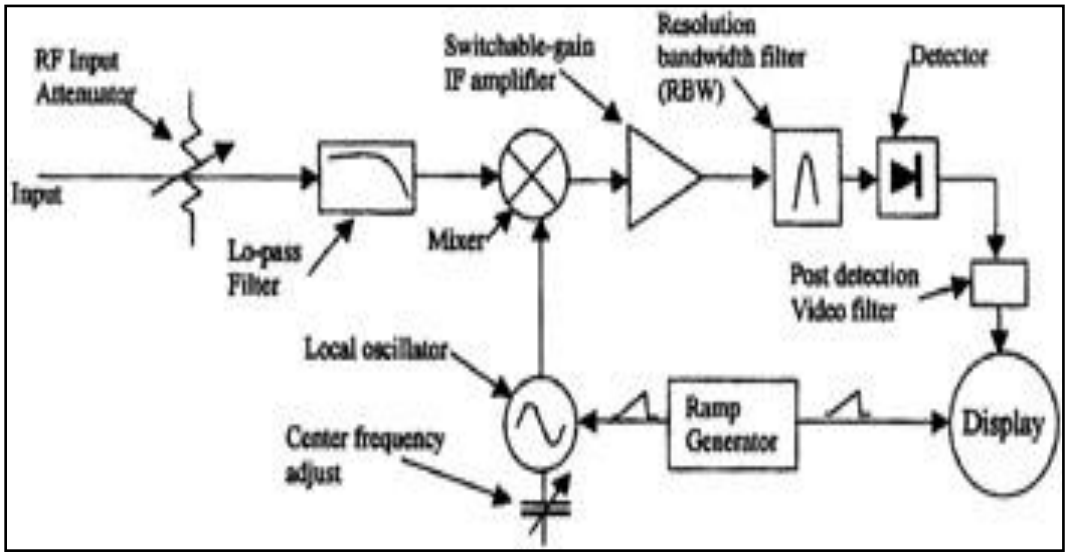

Figure 3.8: Superheterodyne Spectrum Analyzer (Source: www.globalspec.com)

The RF attenuator at the input adjusts the level of the signal to its optimum value so that the input signal does not load the mixer. The Low Pass filter removes any unwanted HF signals at the input from getting mixed up with the local oscillator frequency and generating unwanted responses in the IF stage of the spectrum analyzer. The mixer stage consists of a high performance device which must be able to operate over a wide range of frequencies and do away with any spurious noise signals. The IF amplifier provides the necessary gain to the IF signal. The resolution bandwidth filter is a narrow band pass filter which controls the frequency resolution of the spectrum analyzer. The local oscillator is the key element which must be capable of tuning to a wide range of frequencies so that the required frequency range can be scanned. The ramp generator is used to control the sweep of the local oscillator and the display wherein the horizontal axis of the display is linked to the frequency. The IF signal is converted into a voltage

signal by the envelope detector. This signal is then displayed as the output signal on the LCD display.

ii) FFT Spectrum Analyzer

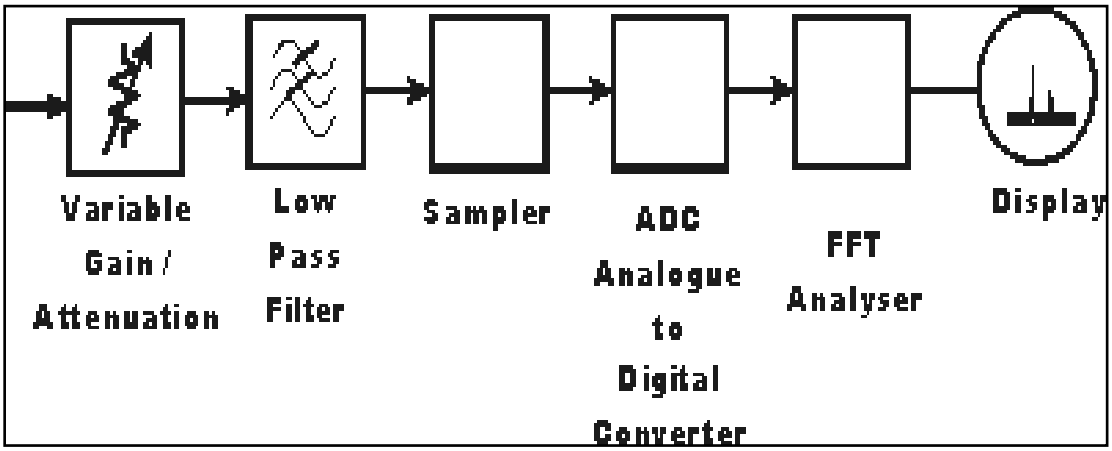

Figure 3.9: FFT Spectrum Analyzer (Source: www.radio-electronics.com)

The first stage of the FFT spectrum analyzer is an attenuator or the gain stage which is used to ensure that the input signal is at the required optimum level for further processing. The low pass filter removes any unwanted HF signals that can create problems while sampling the signal. The sampler is designed to take samples of the signal at discrete time intervals as per the Nyquist theorem. The analog to digital converter (ADC) converts these signals into digital output which is further processed to convert it into the frequency domain by using the FFT analyzer. The display provides the output and various other controls required for processing of the signal.

iii) The Signal Hound Spectrum Analyzer

The spectrum analyzer used in the soil monitoring system is the Signal Hound SA-44B model. The instrument is shown in fig. 3.9 and the specifications of this model are as follows.

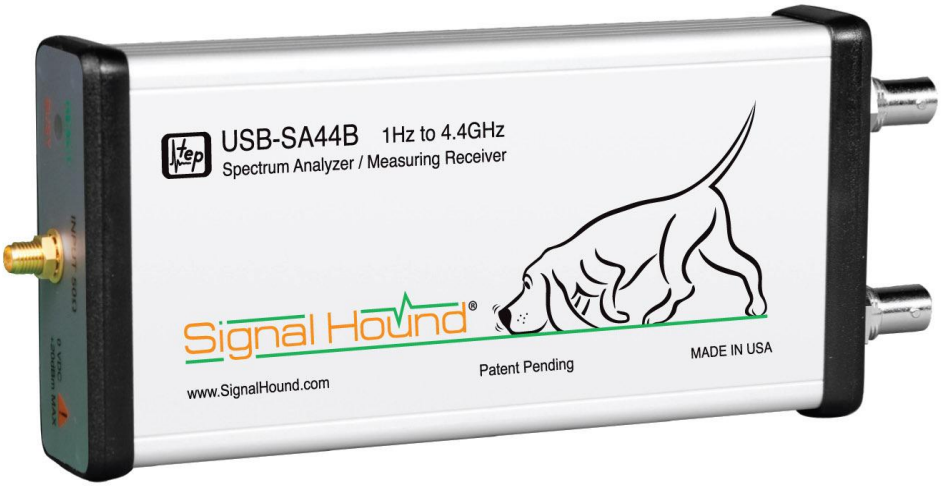

Figure 3.10: SA44B Signal Hound Spectrum Analyzer

The SA-44B operates in the frequency range of 1Hz to 4.4GHz. The front panel has a 50Ω SMA RF input and the rear panel has three connectors. A 10MHz reference input connector, a USB B type connector and a BNC connector that may be used as a TTL/CMOS trigger input, a Self Test Signal output, a Tracking Generator Sync signal, or a generic CMOS Sync Output. The functioning of this connector is controlled by the Signal Hound software. It has two span modes: the centre frequency span and the start and stop frequency span mode. It has a minimum span of 10Hz or zero span and maximum span of 4.4GHz.

3.4.2 Tracking Generator

A tracking generator is basically used to enhance the measurement capabilities of a spectrum analyzer. It is a sweep generator that generates RF signals and the sweep rate is matched to that of the spectrum analyzer. The same frequency is tracked by the tracking generator and the spectrum analyzer, and hence if the output of the tracking generator is connected directly to the input of a spectrum analyzer, a single flat line is observed on the display with the output level representing the level of the input signal. If a device under test is connected between a tracking generator and a spectrum analyzer, then the amplitude level of the output signal of the analyzer will change as per the response of the device under test.

i) Signal Hound Tracking Generator

The tracking generator used in the study is the Signal Hound TG-44A model. The signal hound tracking generator USB-TG44A operates in the frequency range of 10Hz to 4.4GHz. It has an amplitude range of -30dBm to -10dBm. The front panel consists of a 50Ω SMA RF input as shown in figure 3.11.

Figure 3.11: Front panel of TG-44A

The rear panel has three connectors: 10 MHz Reference output provided through a BNC connector, USB type B connector and TG Sync provided through a BNC connector.

The Signal Hound tracking generator TG-44A consists of a 32 bit programmable Direct Digital Synthesizer (DDS). Frequencies in the range of 10Hz to 28MHz are directly generated by the DDS, whereas higher frequencies above 28 MHz are generated by multiplying the signal by an integer ranging from 5 to 200. Harmonics are generated and these are not filtered as they are found to have not much impact on the measurement since they lie well outside the spectrum analyzer input bandwidth [100].

3.4.3 Experimental Setup

The experimental setup for the recording of RF spectra consists of Signal Hound tracking generator at the input of the cell in which the soil sample whose spectra are to be recorded is placed. At the output Signal Hound spectrum analyzer is connected for recording the signal spectra. The cell as shown in figure 3.5 is enclosed inside an iron box to shield the RF signal from any external influence of noise signals. The experimental setup is as shown in figure 3.12.

Figure 3.12: Experimental Setup

Depending on the dielectric properties of the sample placed in the cell, frequency response is obtained. These responses are then processed to estimate the unknown concentration of a constituent in the soil sample.

3.5 Sample Preparation

Five different soil constituents are taken for the study namely urea, potash, phosphate, sodium chloride and calcium carbonate (lime). Samples for the study were prepared in the laboratory by mixing a specific amount of these constituents with distilled water. The amount of urea to be added to distilled water is calculated as follows: the molecular weight of urea is calculated which is found to be 60gms. To prepare one quarter molar solution, the amount of urea to be added to 1L of water is 15gms. From this, the amount of urea to be added to 15ml of water, which is the capacity of the designed cell, is calculated as 225gms. This concentration of urea is the normal concentration and is denoted as 1Urea in the study. Likewise, the concentrations of the remaining four constituents are calculated and the normal concentrations of these are as follows: 1Potash is equal to 279.5mg, 1Phosphate is equal to 3.78gms, 1NaCl is equal to 219.75mg and 1$CaCO_3$ is equal to 375mg.

Apart from the normal concentration, samples of these constituents with other concentrations are also prepared. These are denoted as 0.5, 0.75, 1.25, 1.5, 2, 2.5 and 3, with each number representing the amount of concentration times the normal concentration. The RF spectra of each sample with varying concentrations are measured using the cell. To estimate the unknown concentration of a particular constituent, it is required that the RF spectra of samples obtained should have variability in the attenuation levels as per the change in the concentrations of each sample.

3.6 Spectrum Processing

To estimate the unknown concentration of a constituent in a sample, the detected spectra containing the signature of the required constituent along with the other constituents is passed through a signal conditioning stage. The output from Spectrum Analyzer is stored in the computer. This data is then fed to a CYCLONE II device with Altera NIOS II processor running on it. The recorded spectra are then passed through SIMPLS algorithm based on the Partial Least Square Regression (PLSR) technique running on NIOS II processor. The algorithm estimates the unknown concentration of a constituent and displays the result on LCD or a computer screen. The SNR of the detected spectra must be sufficiently high so as to provide reliable constituent specific information and therefore data processing is needed to identify spectral features of a constituent from the combination spectra originating from interfering matrix constituents.

The world is made up of complex systems and to understand the working of these complex systems, proper analysis of the system through the use of multiple measurements is necessary. For example, to predict the weather conditions on a particular day, various measurements such as the pressure and wind conditions, humidity in the atmosphere, temperature etc. are required to build a model which can be used for the prediction. The analysis of complex systems gave rise to statistical techniques called as multivariate analysis. Univariate statistical methods are based on considering a single variable at a time, which may not be sufficient enough to properly understand a process or a system. Much of the information gets lost when univariate methods are used for data analysis. Hence, multivariate techniques are useful in bringing out hidden information from the available data. Multivariate techniques use more than one variable at a time which provides a better understanding of a system. It gives more accurate insight to the behavior of data that are highly correlated and can easily point out potential problems in a system. Multivariate techniques have been a part of statistical analysis right from 1900's, but it is only after the development of high speed computers and the availability of analytical software that these techniques have become popular.

4.1 What is Multivariate Analysis?

Multivariate analysis in simple terms can be defined as the simultaneous analysis of multiple variables so as to understand the relationship that exist between them [101]. It is a statistical process wherein simultaneous analysis of multiple predictor variables is done with multiple independent variables with the help of matrix algebra. The main goal of multivariate analysis is to reduce the large number of data variables into a smaller

number of latent variables by taking into consideration the variability existing in the data set. Thus, in multivariate data analysis the relationship existing between the variables and the sample in the data set are captured and transformed into a new set of latent variables. The rows in the data set are termed as 'observations' which form the sample and the columns consist of variables that represent each of the measured entities for each object. The variables are divided into X variables called factors and Y variables called responses. Multivariate methods that are used to find the relationship between factors and responses are called as regression methods [102]. Multivariate techniques can be categorized into two types: quantitative method and classification method. Quantitative method includes multiple linear regression, principal component regression and partial least squares. These techniques are useful in finding the relationship between x and y variables. Classification method includes principal component analysis, cluster analysis, factor analysis and discriminant analysis. These techniques are useful in situations where it is required to identify or classify sample into groups [103].

4.1.1 Multiple Linear Regression (MLR)

The use of multiple linear regression is to study the relationship between several independent (predictor) variables and a single dependent variable. The least square approach is used in this method for the prediction of dependent variable. If the independent variables are correlated then the importance of this correlation is estimated using partial coefficient of correlation. The prediction model equation for MLR is given as:

$$Y = b_0 + b_1X_1 + b_2X_2 + \ldots\ldots + b_nX_n + \varepsilon$$

Where $\mathbf{b_n}$ is the partial regression coefficient which represents the change in **Y** associated with one unit increase in $\mathbf{X_n}$ with all other independent variables are kept constant (Ceterus Peribus) [104].

4.1.2 Principal Component Analysis (PCA)

It is a technique that is used to reduce a large number of variables from the original data set into a smaller number of independent linear combinations of variables called as principal components. It is basically a dimension reduction that retains as much as of the variability existing in the original data set. The reduction principle used in PCA can be illustrated as shown in the figure 4.1.

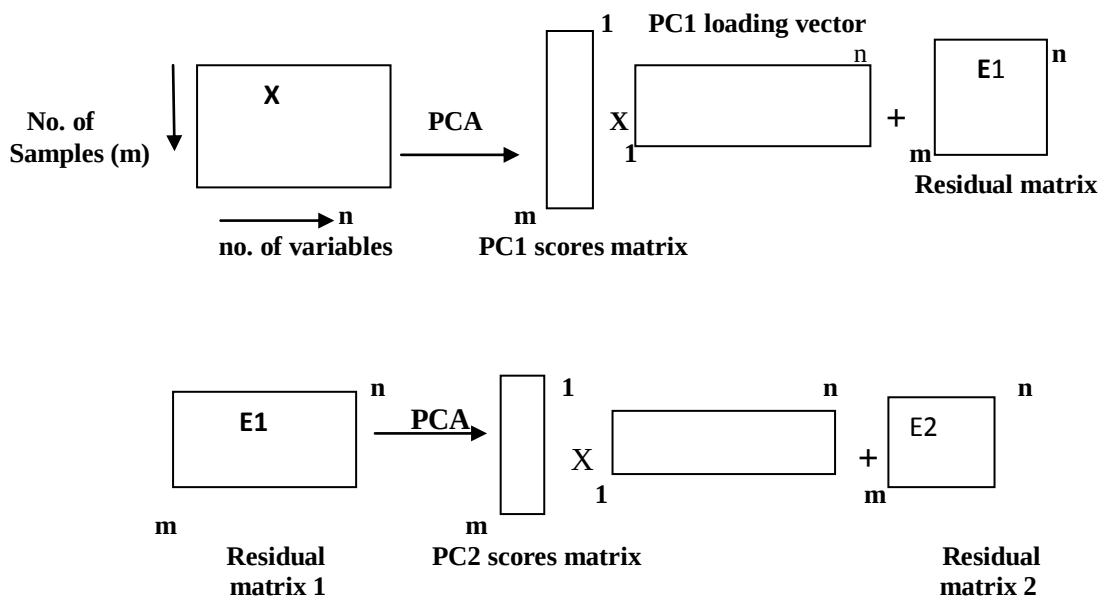

Figure 4.1: Principle of reduction used in PCA

PCA concentrates strongly correlating variables into a new set of uncorrelated variables called principal components which are the linear combinations of the original

variables. The loadings in the loading matrix represent the relationship between variables. The scores in the score matrix represent the relationship between samples. The first PC will have the largest possible variance and accounts for the maximum amount of variability existing in the original data set. The subsequent PC component will then extract as much as possible variance provided that it is uncorrelated with the previous PC [105, 106].

4.1.3 Factor Analysis

It is a technique used when the original data set needs to be reduced into smaller groups depending on the shared variance among them. The main goal of factor analysis is to explain the underlying structure or composition of the data. Factor analysis is of two types- exploratory factor analysis using which preliminary reduction of data is obtained and confirmatory analysis of data which is used for the confirmation of the existence of the factors [102].

4.1.4 Cluster Analysis

It is a technique used for grouping of data samples' with similar values across a number of variables. The grouping is done in such a way that two samples will have maximum degree of association if they are of the same group and minimum degree of association if they are of different groups. Cluster analyses consist of large number of algorithms and methods that can be used for grouping of data. It is considered as an excellent tool for exploratory data analysis [107].

4.1.5 Discriminant Analysis

It is a technique used in the classification of variables into groups. It predicts a dependent variable called as grouping variable using one or more independent variables called as predictor variables. This method can be used only for cases where the groups are already known prior to analysis [108].

4.1.6 Partial Least Square Regression (PLSR)

This is a method, which is used in situations where the number of predictors is more than the number of observations. Like PCA, it is also a dimension reduction technique and is used for the reduction of the number of predictor variables. PLSR can be used as an alternate method to MLR, if at least one of the following conditions is satisfied:

1. The predictors are correlated
2. Number of predictors more than the number of observations
3. The responses are correlated.

The PLS extracts a given number of factors from the predictor data, that takes into account the variance existing in both predictors and responses. The approach of PLSR is found to be more suitable in prediction based studies [109].

4.2 Multivariate Calibration Model for Soil Monitoring System

The soil monitoring system is developed using a prediction based statistical model. It makes use of the RF spectral data obtained from the designed soil sensor for the analysis and the prediction of soil nutrients. Partial Least Squares (PLS) can be an effective tool for the analysis of data as it has minimum constraints on scales of measurement, size of

sample, and residual distributions. It consists of methods for regression and classification, and techniques for reducing dimension and tools for modeling. The basic assumption on which the PLS methods work is that a small number of latent variables that are not directly observed or measured are used to drive the observed data generated through an experiment. The method for projecting the observed data to its latent structure known as Partial Least Squares was first developed by Herman Wold and his coworkers. PLS is being widely used as a standard tool in chemometrics for the analysis of a wide spectrum of problems related to chemical data. The successful data analysis of PLS in chemometrics has led to its increase use in other scientific fields such as bioinformatics, food research, medicine, pharmacology, social sciences, physiology etc.

4.2.1 Partial Least Square Regression (PLSR)

The PLSR technique is used to model a linear relation between a set of predictors and a set of response variables. This relation is then used in the prediction of the value of a response variable for an unknown sample. The main aim of PLSR is to predict the responses and not in the study of the underlying relationship between the variables. Latent factors denoted as 'T' and 'U' are indirectly extracted and these factors account for most of the variation in the response variables and are used for modelling of the responses. T referred to as X scores are used to predict the Y scores U and these Y scores are used to construct prediction for the responses. The equation representing PLSR model is given as

$$\mathbf{Y} = \mathbf{XB} + \mathbf{E}$$

Where **Y** is **n x m** response matrix, **n** is the number of observations and **m** is the number of variables.

X is **n x p** predictor matrix with **p** as the number of predictor variables.

B is a **p x m** regression coefficient matrix and **E** is a noise term or residual matrix which has the same dimensions as **Y**.

A **p x c** weight matrix **W** for **X** is produced in PLSR such that

T = XW where the columns of **W** are weight vectors for the **X** columns, thus producing **n x c** factor score matrix **T**.

The weights are computed in such a way that maximum covariance exists between the responses and the corresponding factor scores. The loadings for **Y** represented as **Q** are then generated using ordinary least squares procedures for regression of **Y** on **T** such that

Y = TQ + E.

The prediction model is complete once **Q** is computed and **Y = XB + E** where **B = WQ**.

For the complete description of PLSR procedure an additional matrix **p x c** factor loading matrix is required which gives factor model

X = TP + F

where **F** represents the residual or the unexplained part of the **X** score [110, 111].

4.2.2 NIPALS Algorithm

This is the standard algorithm used for the computing of factors in PLSR and the acronym NIPALS stands for Non-linear Iterative Partial Least Squares. **X** is the matrix containing the data to be analyzed. The NIPALS algorithm is as follows.

For each $k=1,\ldots,n$, where $A_0=X'Y$, $M_0=X'X$, $C_0=I$, and **c** given,

1. compute q_k, the dominant eigenvector of $A_k'A_{ks}$
2. $w_k=C_kA_kq_k$, $w_k=w_k/||w_k||$, and store w_k into W as a column
3. $p_k=M_kw_k$, $c_k=w_k'M_kw_k$, $p_k=p_k/c_k$, and store p_k into P as a column

4. $q_k=A_k'w_k/c_k$, and store q_k into Q as a column

5. $A_{k+1}=A_k - c_k p_k q_k'$ and $M_{k+1}=M_k - c_k p_k p_k'$

6. $C_{k+1}=C_k - w_k p_k'$

The factor scores matrix T is then computed as $T=XW$ and the partial least squares regression coefficients B of Y on X are computed as $B=WQ$.

The features of NIPALS algorithm are it is transparent, accurate and slow.

4.2.3 SIMPLS Algorithm

An alternative estimation method for partial least squares regression components is the SIMPLS where the acronym SIMPLS stands for Statistically Inspired Modification of the PLS algorithm. The algorithm is described as follows.

For each $k=1,\ldots,c$, where $A_0=X'Y$, $M_0=X'X$, $C_0=I$, and c given,

1. Compute q_k, the dominant eigenvector of $A_k'A_k$

2. $w_k=A_k q_k$, $c_k=w_k'M_k w_k$, $w_k=w_k/sqrt(ch)$, and store w_k into W as a column

3. $p_k=M_k w_k$, and store p_k into P as a column

4. $q_k=A_k'w_k$, and store q_k into Q as a column

5. $v_k=C_k p_k$, and $v_k=v_k/||v_k||$

6. $C_{k+1}=C_k - v_k v_k'$ and $M_{k+1}=M_k - p_k p_k'$

7. $A_{k+1}=C_k A_k$

Similar to NIPALS, the T of SIMPLS is computed as $T=XW$ and B for the regression of Y on X is computed as $B=WQ'$.

The SIMPLS algorithm is found to be fast, accurate and found to maximize the covariance for multivariate **Y** [112].

The NIPALS algorithm is found to be slower as compared to SIMPLS when the number of objects is much larger than the number of explanatory and response variables. SIMPLS does not involve the breakdown of the data sets and hence it is easier to interpret as compared to NIPALS [113]. Taking into consideration the advantages of SIMPLS, this technique is used in the present study. The flowchart for the SIMPLS algorithm is as shown in figure 4.2.

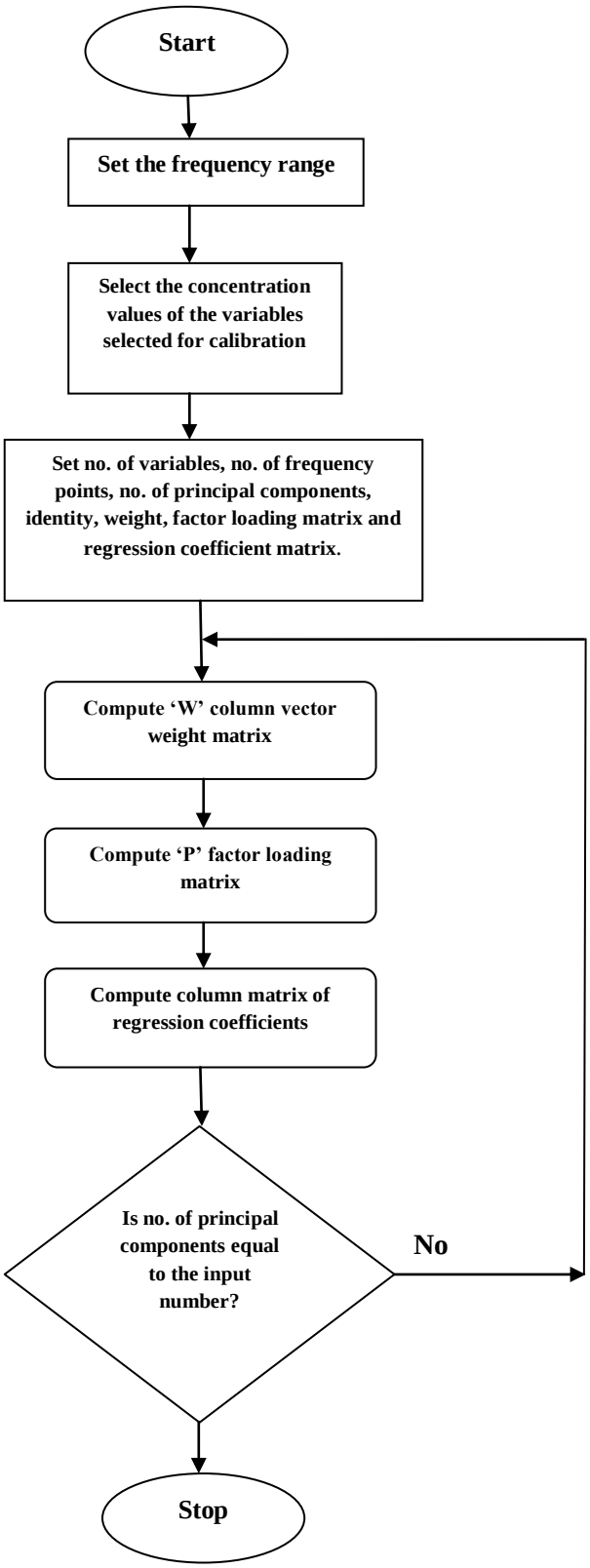

Figure 4.2: Flowchart of SIMPLS algorithm

4.3 Testing of the PLSR Based Model for Soil Urea Estimation

The PLSR model for the soil monitoring system is tested using the ParLes software for two cases:

4.3.1 Case1: Concentrations of urea in the samples changed from below normal to above normal i.e. from 0.5 to 3.

To study the effect of change in concentrations of urea from below normal to above normal concentration value on the estimation of urea, while keeping the other components in the samples constant i.e. at their normal value. Table 4.1 shows the concentrations of various constituents in the sample used in the calibration file.

Table 4.1: Concentrations of the constituents for 16 different samples used in the calibration file.

Sample No.	Urea	Nacl	Potash	Calcium	Phosphate
1.	0.5	0.5	0.5	0.5	0.5
2.	0.75	0.75	0.75	0.75	0.75
3	1	0.75	0.75	0.75	0.75
4.	1.5	1.5	1.5	1.5	1.5
5.	1.25	1.25	1.25	1.25	1
6.	1.5	1.25	1.5	1.25	1.25
7.	0.75	1.25	1.25	0.75	1.5
8.	0.75	1.25	1	1.25	1.25
9.	0.75	1.25	1.25	1.25	0.75
10.	0.5	1	0.5	1	1
11.	0.75	0.5	1	0.5	0.5
12.	0.75	0.75	0.75	1	0.5
13.	1.5	1.5	1.5	1.5	1.25
14.	1.25	1.25	1.25	1.25	1.25
15.	0.5	0.5	0.5	0.5	0.75
16.	1.5	1.25	1.25	1.25	1.25

Figure 4.3 below shows the RF spectra in the frequency range of 10MHz-500MHz of the various samples taken in the calibration file. It can be observed from the spectra that the response pattern is similar for the samples, with only the attenuation levels changing. These types of responses are useful in estimating an unknown concentration of a constituent using multivariate analysis.

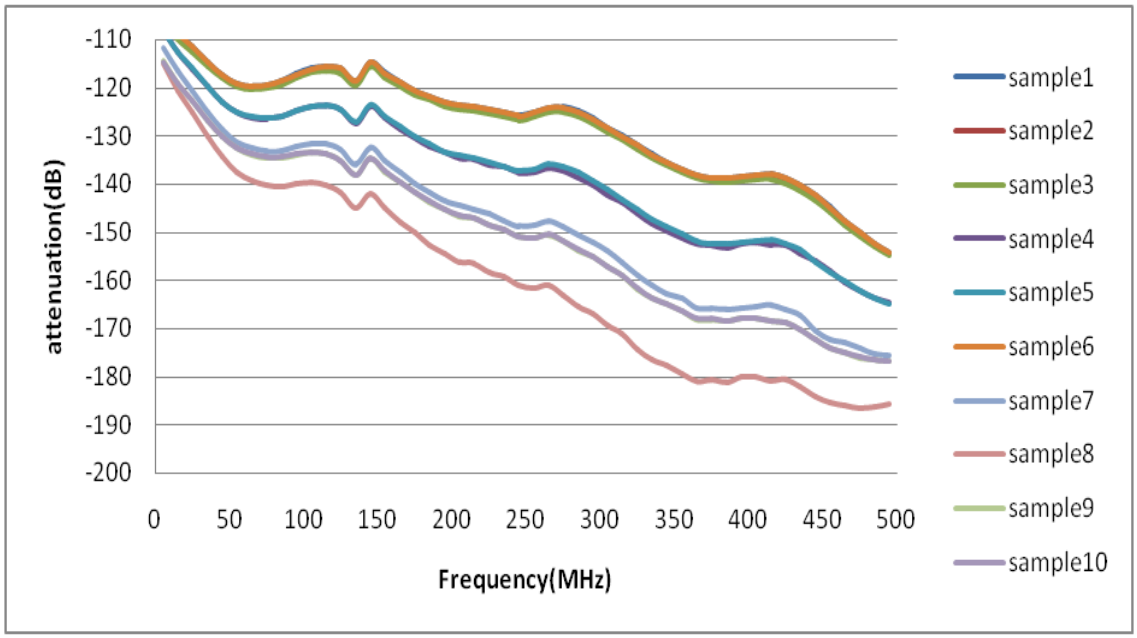

Figure 4.3: RF spectra in the frequency range of 10-500MHz

Table 4.2 shows the sample concentrations with urea concentrations changing and other component concentrations kept at their normal concentration values. These samples are used as unknowns for the estimation of urea.

Table 4.2: Samples used as unknowns for estimation of urea

Sample No.	Urea	Nacl	Potash	Calcium	Phosphate
1	0.5	1	1	1	1
2	0.75	1	1	1	1
3	1	1	1	1	1
4	1.25	1	1	1	1
5	1.5	1	1	1	1
6	2	1	1	1	1
7	2.5	1	1	1	1
8	3	1	1	1	1

4.3.2 Case 2: Keeping urea concentration constant and changing the other component concentrations.

This is to study the effect of change in the concentrations of other constituents in the sample on the estimation of urea. The calibration file for the testing is the same as shown in table no. 4.3.2. The samples taken for studying the effect of change in concentrations of various constituents are as shown in table no.4.3 to table no. 4.6.

Table 4.3: Samples showing change in concentrations of NaCl.

Urea	NaCl	Potash	Calcium	Phosphate
1	0.5	1	1	1
1	0.75	1	1	1
1	1	1	1	1
1	1.25	1	1	1
1	1.5	1	1	1
1	2	1	1	1

Table 4.4: Samples showing change in concentrations of Potash

Urea	NaCl	Potash	Calcium	Phosphate
1	1	0.5	1	1
1	1	0.75	1	1
1	1	1	1	1
1	1	1.25	1	1
1	1	1.5	1	1
1	1	2	1	1

Table 4.5: Samples showing change in concentrations of Calcium

Urea	NaCl	Potash	Calcium	Phosphate
1	1	1	0.5	1
1	1	1	0.75	1
1	1	1	1	1
1	1	1	1.25	1
1	1	1	1.5	1
1	1	1	2	1

Table 4.6: Samples showing change in concentrations of Phosphate

Urea	NaCl	Potash	Calcium	Phosphate
1	1	1	1	0.5
1	1	1	1	0.75
1	1	1	1	1
1	1	1	1	1.25
1	1	1	1	1.5
1	1	1	1	2

4.3.3 ParLes Software

The ParLes software is a chemometric shareware software tool used for multivariate modeling and prediction. It was developed by Viscarra Rossel and can be used for teaching and research in chemometrics and spectroscopy. The features of ParLeS software are as listed below.

i. It consists of algorithms that are used for the transformation, preprocessing and pretreatment of the spectral data, so as to increase the robustness of the software.
ii. Contains implementation of Principal Component Analysis (PCA) and PLSR techniques.
iii. Provides a graphical output and user friendly interface and functionality [114].

The use of ParLes software for building the PLSR model for the soil monitoring system is discussed in appendix I. The results obtained are discussed in chapter 6.

The demand for applications on real time signal processing is very high and as such there is huge pressure on system developers and designers to keep up with the growing demand. Consumers are always in search of products that are smarter, faster, effective and portable. Hence, design engineers need to work on satisfying these varied demands by designing products that are cost effective, have low power consumption along with increase in its performance and flexibility. The market for Digital Signal Processing (DSP) involves applications used in communication, medical system, image processing and consumer electronics. Products designed based on these applications can be developed using different types of hardware platforms. The digital data processing functions can be implemented using two different hardware platforms the field programmable gate arrays (FPGAs) and the digital signal processors (DSP).

5.1 DSP Processor or FPGA – Selecting a Hardware Platform

The primary choice for signal processing applications has been the DSP processors over a long time period of time. Due to the huge demand for high performance multimedia devices, the complexity of processing algorithms increased which resulted into a shift towards FPGA based designs from the DSP processor based designs.

The DSP processor is a form of microprocessor that is specialized and is reconfigurable and reprogrammable depending upon the tasks that it is designed to handle. Since their invention in 1980s, DSP processors have been used over a wide range of applications due to their excellent performance in terms of power and cost. The cost of developing an application using DSP is considerably low and has a well established support in terms of debugging and optimization tools provided by third party vendors.

A DSP processor contains various resources like internal and external memory, processor core registers, DMA engine and I/O peripherals which are all shared by the tasks. The sharing of these resources by a task can sometimes lead to unexpected delays and latency that may result in system failures in real time applications. The use of C language and assembly code for programming a DSP processor makes it easier to use. Though DSP processors are software programmable, the fixed hardware architecture and the limited resources makes it difficult to use DSP in applications that require customized hardware. Also, the DSP processor performance is limited by its clock rate and the number of operations per clock cycle. The block diagram of a DSP processor is as shown in figure 5.1.

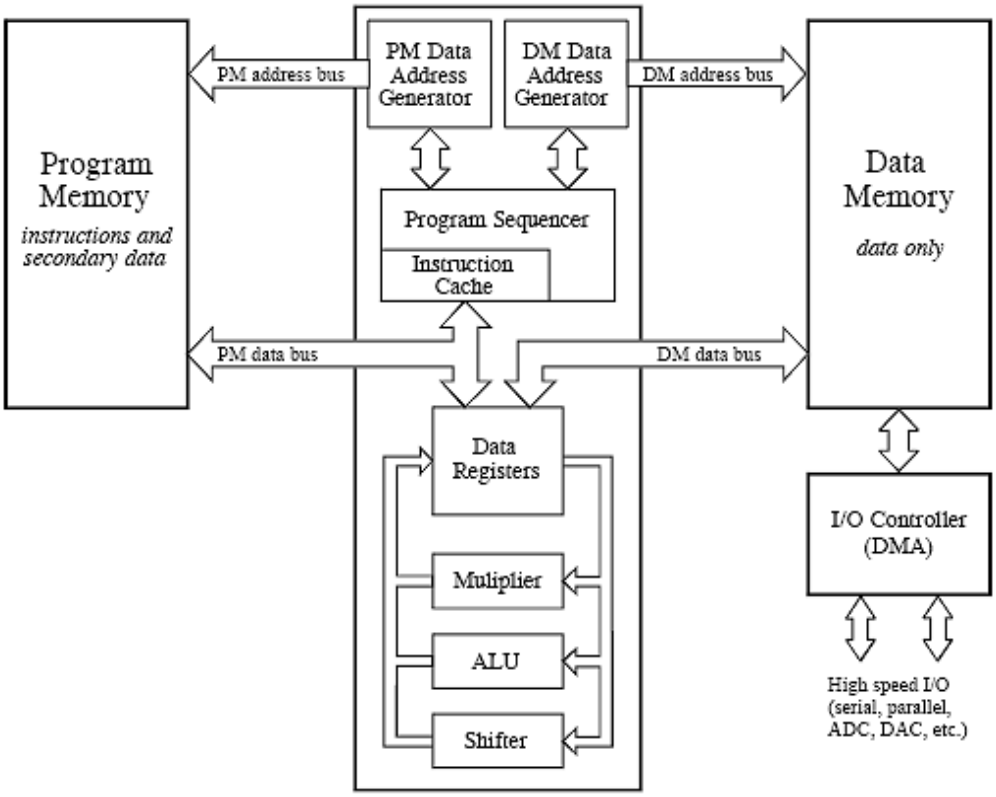

Figure 5.1: DSP processor block diagram

FPGAs are devices that are made up of logic elements and memory. Based on the application to be implemented, the logic elements can be configured to operate in different modes. DSP systems implemented using FPGAs have the advantages of customized hardware such as customized architecture, memory bus structure and number of MAC (multiply – accumulate) blocks. The logic elements in FPGA can be configured using hardware description language (HDL) such as VHDL. Due to its flexibility and reconfigurable architecture, FPGA supports parallel processing and data pipelining on a large scale. Significant improvements in performance can be seen using FPGA as compared to processor based implementation. This is because of the use of multiple distributed memory banks for pipelining of algorithms and partitioning of data. The features of DSP processors and the FPGA are summarized in table 5.1[115-117].

Table 5.1: Comparison summary of DSP and FPGA

		Programmable DSP e.g. TI	FPGA-based DSP e.g. Xilinx
Performance		<1 MSPS	1 - 500 MSPS
Design Flexibility		Fixed Architecture (s/w programmable)	Reconfigurable Architecture
Design Effort		C-based Flow Many Algorithms	Simulink or HDL based
Power	per Device	Suitable for portable	Few Watts
	per channel	Not scalable	Scalable
Cost	per Device	Suitable for >1MU	Suitable for <250KU
	per Channel	Not scalable	Scalable

Good Bad OK

5.2 FPGA Architecture – Overview

FPGA is a reprogrammable chip invented by Ross Freeman, the co founder of Xilinx. FPGAs are silicon chips that can be configured to implement any kind of a digital circuit or a system. An FPGA consists of programmable logic blocks for the implementation of logic functions, programmable routing interconnect that connects the logic blocks and I/O blocks for making off chip connections. Figure 5.2 shows the architecture of an FPGA.

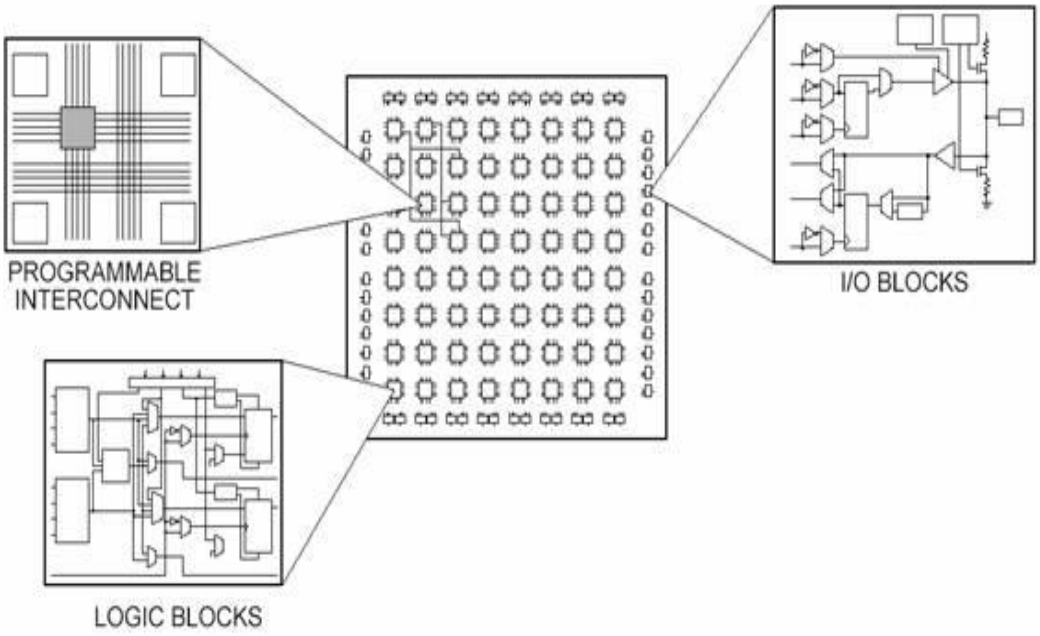

Figure 5.2: Parts of an FPGA

The configurable logic block (CLB) consists of two basic components the flip flops and the look up tables (LUT) which forms the basic logic unit of an FPGA. The LUTs are small amount of RAM used in the implementation of CLB. The routing interconnect of an FPGA provides the connections between logic blocks and I/O blocks for the implementation of any customized circuit. It consists of wires and programmable switches that are configured to form the required connection. The routing interconnects

needs to be highly flexible so that the implementation of wide variety of circuits with varying demands becomes very easy.

5.2.1 Configuring an FPGA

Software based development tools are used for defining the digital computing tasks in order to configure the millions of logic elements in an FPGA into the desired circuit. These tasks are then compiled into a bit stream which contains the required information for wiring the components together. Earlier only low level design tools were available with FPGA which required the engineers having good understanding of digital circuit design. High level synthesis design tools are now available which makes it easier to program an FPGA by converting graphical block diagrams into digital circuitry.

The traditional FPGA design tools used hardware description language (HDL) such as VHDL and Verilog. These low level languages combine some features of other textual languages so as to design a circuit. The HDL code is then verified by the FPGA programmer by writing test benches which are run in a simulation environment for validation of the design. Once it is verified, it is then compiled into a configuration file or a bit stream that contains the information on the wiring together of the components. The design flow of an FPGA system is as shown in figure 5.3.

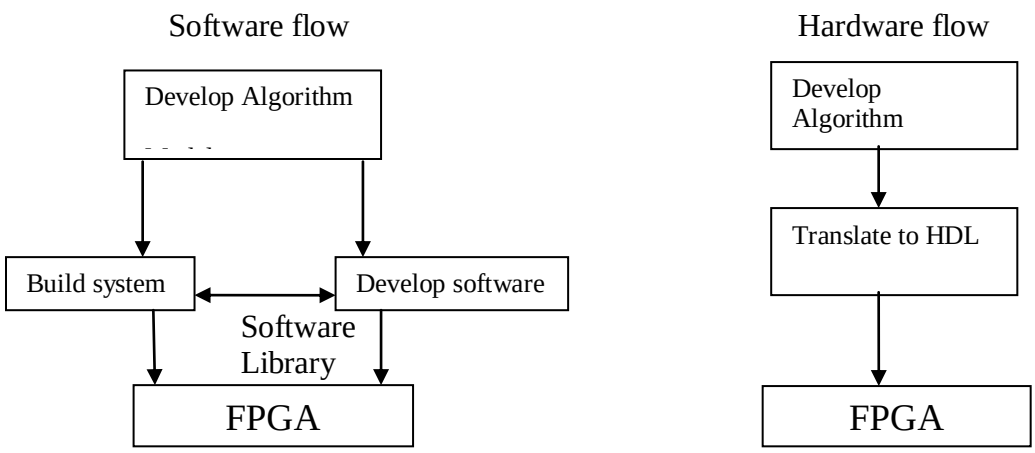

Figure 5.3: Design flow for an FPGA

5.3 Soft Core Processors for Embedded Systems

A digital system can be designed either to be a general purpose system or an application specific system. General purpose systems allow the end users to program the system as per their requirements whereas application specific systems are designed for a specific purpose and hence cannot be used for any other purpose. Generally, application specific systems are a part of larger systems and such systems are commonly referred to as embedded systems. An embedded system designed using FPGA may require a controller which may be present in the form of a microcontroller or it may be a full fledged microprocessor. Various options for using a processor in an FPGA are available. One option may be the use of off-the-shelf microprocessor mounted on the board and is connected to the FPGA using a standard bus. Second option is the use of a hard processor core on the chip which has a dedicated silicon area on the FPGA. Hard core processors tend to reduce the flexibility of the FPGA system. Another option is the use of soft core processor which is implemented entirely in the FPGA and can be customized as per the system requirements designed using the FPGA. The use of soft core processors in an

FPGA design is found to reduce the cost and increase the flexibility of the system. The soft core processors have a number of advantages, some of which are as given below:

i. They have a higher level of abstraction which makes them easier to understand.
ii. They offer high flexibility that allows the designers to modify the design parameters by editing the source code.
iii. They are platform independent and can be synthesized in programmable hardware.

Most of the FPGA vendors provide soft core processors along with supporting and development tools. Some commercially available soft core processors are Altera NIOS II, Xilinx MicroBlaze, LEON3 and OpenRISC [119-121].

5.3.1 LEON3

It is a 32 bit processor model that can be synthesized using VHDL and is compliant with SPARC V8 architecture. It is a highly configurable model and is particularly suited for system-on-chip designs. It can be used in research and education as the full source code is available under GNU, GPL license free to the users. The block diagram of LEON3 is as shown in figure 5.4.

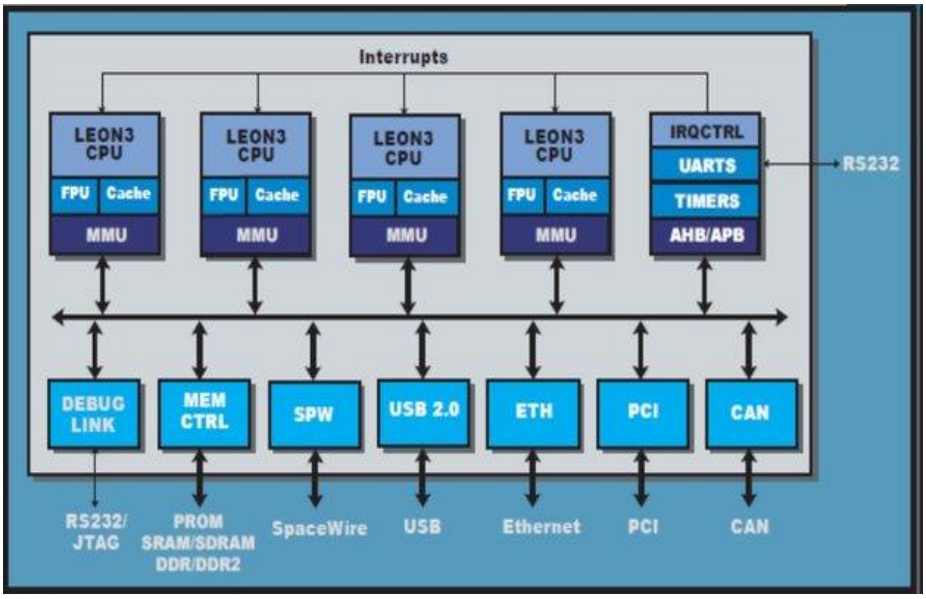

Figure 5.4: LEON3 Architecture

The advantages of LEON3 processor are:

i. No need of license for using in research and education.

ii. Source code is available

iii. Linux/RTOS can be installed.

The disadvantages are:

i. Support for only a few FPGA development boards.

ii. Not very popular.

5.3.2 MicroBlaze

It is a 32 bit soft core processor developed by Xilinx having RISC architecture. The block diagram of the processor is as shown in figure 5.5.

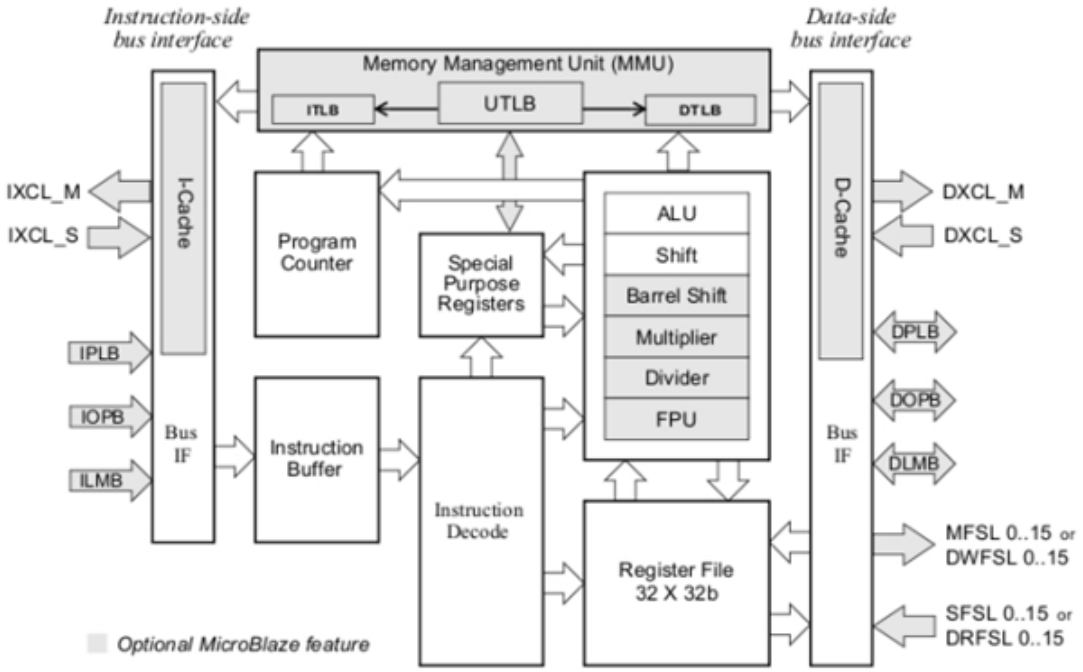

Figure 5.5: MicroBlaze Processor

MicroBlaze can be used with all Xilinx FPGA families. It supports a large number of configuration options. The connections are done through the AXI standard bus. The source code is not available and license is required for its use.

5.3.3 NIOS II

It is a load store RISC architecture based soft core processor developed by Altera. The data path size can be adjusted to either 16 bits or 32 bits as required by the user. The user also has the flexibility of selecting the register size, cache size and the instruction size. The integrated development environment (IDE) of NIOS II makes it possible to run, debug and build software for various platforms. The block diagram of NIOS II architecture is as shown in figure 5.6.

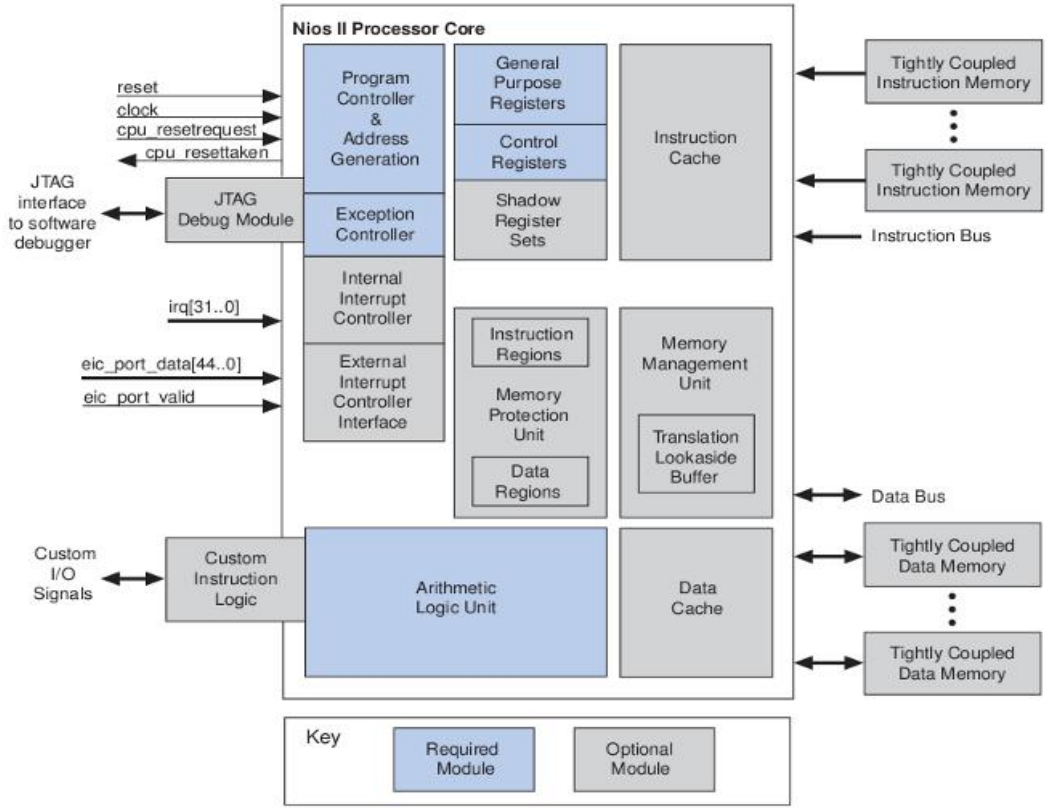

Figure 5.6: NIOS II Processor Architecture

There is no requirement of a license when using NIOS II processor for building a system with Quartus II Web Edition. The IDE is easy to use and no extra tool is required for JTAG programming. One of the limitations of NIOS II processor is that it can be used only in Altera FPGA and some IP cores have limited licenses which stop working after some time.

5.3.4 OpenRISC

The OpenRISC core is a synthesizable soft core processor developed by a group of Slovenian University students. The full architecture specifications along with the simulator and the Verilog HDL code are made available to the users through their website

OpenCores.org. It is easy to build a system if the proper hardware and software support files are downloaded. The block diagram of the OpenRISC core is as shown in figure 5.7.

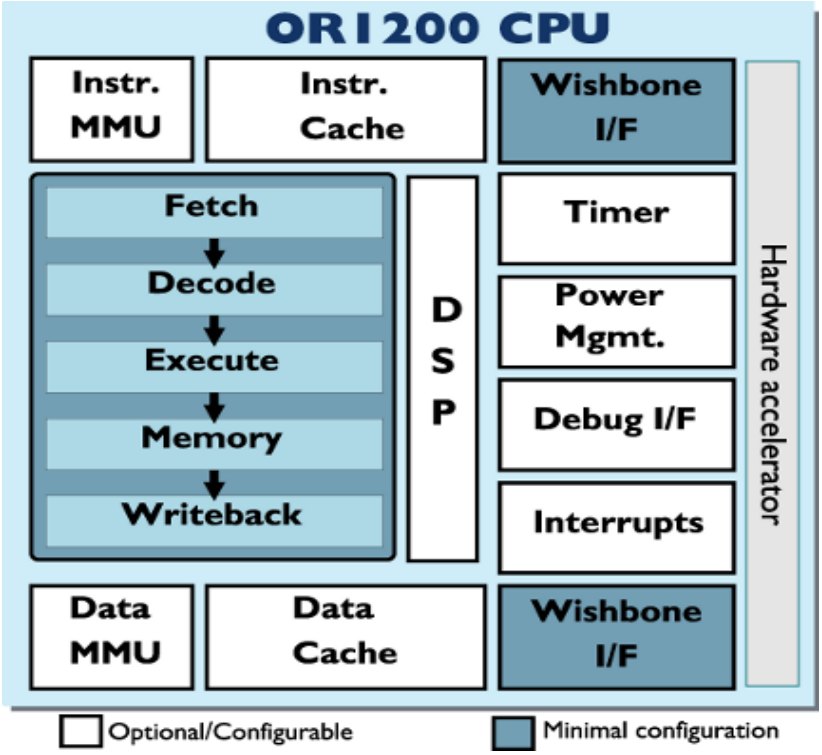

Figure 5.7: Architecture of OpenRISC 1200 Processor.

The limitations of the OpenRISC core are it is supported by only a few FPGA development boards and the debugging tools that are provided are quite difficult to follow [122].

5.3.5 Comparison of Soft Core Processors

The comparison of LEON3, MicroBlaze, NIOS II and OpenRISC can be summarized in a tabular form as shown in table 5.2.

Table 5.2: Comparison of Processors

	Nios II	**MicroBlaze**	**OpenRISC**	**LEON3**
Speed MHz (ASIC/FPGA)	200 MHz FPGA	200MHz FPGA	300MHz ASIC	125MHz/400MHz (FPGA /ASIC)
ISA	32-bit RISC	32-bit RISC	32-bit or 64 bit RISC	32-bit RISC
Cache Memory (I/D)	Up to 64KB	Up to 64KB	Up to 64KB	Up to 256KB
Pipeline	6 Stages	3 Stages	5 Stages	7 Stages
Register File Size	32	32	32	2-32
Custom Instructions	Up to 256 Instructions	None	Unspecified limit	None
Implementation	FPGA	FPGA	FPGA, ASIC	FPGA/ASIC

Various features of the processors as indicated in the first column of table 5.2 are used in the comparison of the soft core processors. It can be seen that the NIOS II and the MicroBlaze processors have the highest operating frequency of 200MHz for FPGA implementation. NIOS II also provides a feature for extending its instruction set with the addition of up to 256 custom instructions. This particular feature is not present in MicroBlaze. Both NIOS II and MicroBlaze processors are optimized for the use in development of FPGA based applications. The other two processors are not designed specifically for the FPGA implementation. Each core has its own features and performance characteristics and hence based on the application design, embedded system designers should select a processor suitable for their needs.

5.4 Altera NIOS II Soft Core for Soil Monitoring System

The selection of the hardware platform i.e. Altera or Xilinx for the implementation of soil monitoring system was based on literature available. As per the performance analysis report of Cyclone v/s Spartan 3 by Altera, it is found that Altera Cyclone FPGA is the low cost FPGA performance leader when compared with Xilinx Spartan 3 FPGA. Comparison of the fastest speed grade devices for both Xilinx Spartan 3 family and Altera Cyclone FPGA family, it is observed that the Cyclone family outperforms the Spartan 3 family by an average of 70.2 percent. Also, the slowest speed grade Cyclone devices are found to outperform the fastest speed grade Spartan 3 devices by an average of 29.6 percent. Hence, Cyclone family devices are performance leaders as compared to Spartan 3 devices among the low cost FPGA [123]. In a study where DSP algorithms were implemented using Altera and Xilinx platforms, it was observed that working on Altera platform is much easier, user friendly, flexible and the development and compilation time is much less than that for Xilinx platform [124].

5.4.1 Comparative Study of Altera Development and Education (DE) Boards

The Altera DE boards provide a hardware platform for users in the designing of low cost, low end applications using FPGA. The hardware and software tools used in the boards are all based on state-of-art technology. Table no. 5.3 shows a comparison of three different Altera DE boards.

Table 5.3: Comparison between Altera DE boards

Features	DE0	DE1	DE2
FPGA	Cyclone III	Cyclone II	Cyclone II
LE	15,408	20,000	35,000
SDRAM	8MB	8MB	8MB
SRAM	0	512K	512K
Flash memory	4MB	4MB	4MB
Interface	RS-232, PS/2,USB Blaster	Audio, video, RS-232, SD card, USB Blaster, JTAG/AS	TV decoder, RS-232, Ethernet, USB Host/Device, JTAG/AS
Clock input	50MHz	50MHz, 24MHz & 27MHz	50MHz, 27MHz
LCD interface	16x2	No	16x2
IrDA tranceiver	No	No	Yes

The DE1 and DE2 boards are feature rich which can be used in the design of wide range of applications. The DE0 is an entry level board with basic features and is mostly used as an educational tool. Though DE1 and DE2 are almost similar in features, DE1 is a scaled down version of DE2 with some features being less extensive. The number of logic elements in DE2 is more than DE1and also the number of interfaces available in DE2 are more as compared to DE1.

5.4.2 Altera DE2 Board for Soil Monitoring System

The soil monitoring system is designed using the Altera DE2 board having cyclone II FPGA that supports NIOS II soft core processor. The DE2 board is as shown in fig. 5.8.

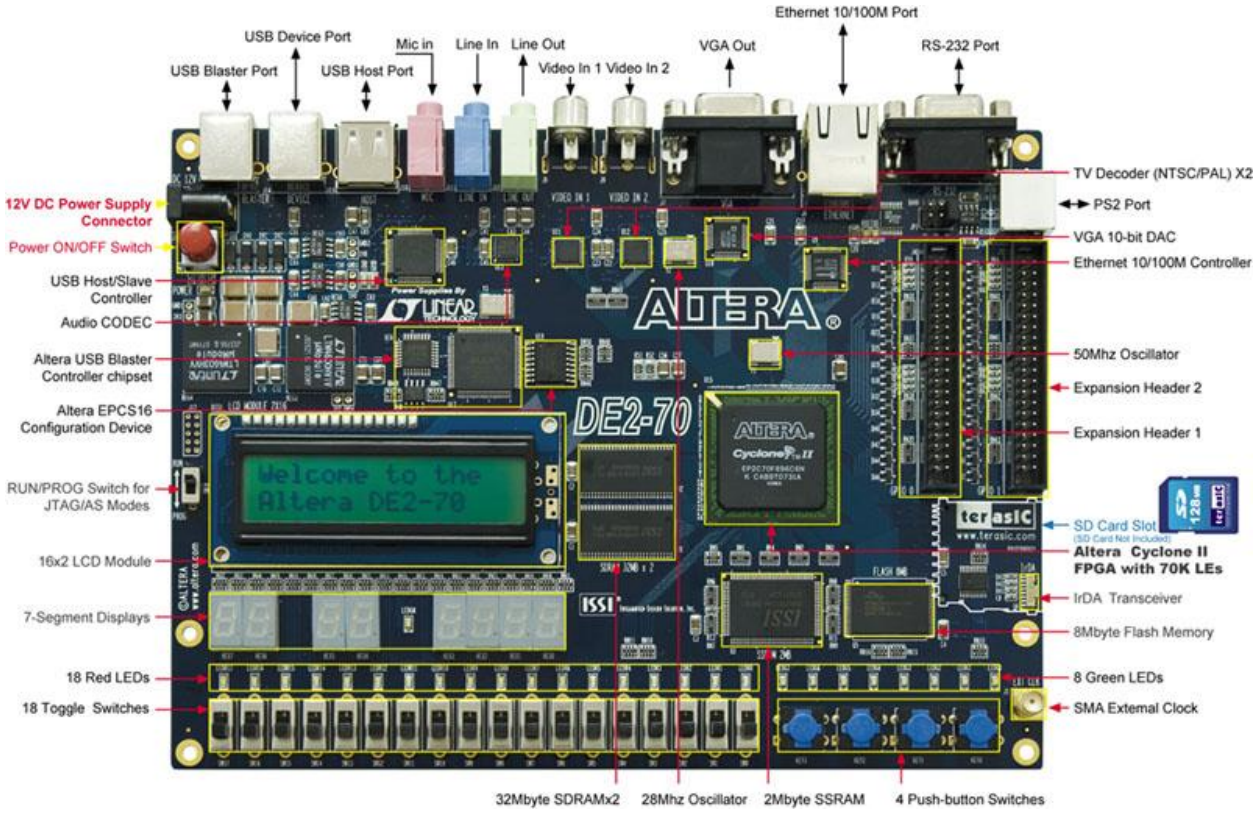

Figure 5.8: Altera DE2 Board

The DE2 board has large number of features that the users can use to design circuits ranging from very simple to multimedia projects. The DE2 board provides the following hardware:

i. Altera Cyclone® II 2C35 FPGA device
ii. Altera Serial Configuration device - EPCS16
iii. 512-Kbyte SRAM
iv. 8-Mbyte SDRAM DE2 User Manual 5
v. 4-Mbyte Flash memory (1 Mbyte on some boards)
vi. USB Blaster (on board) for programming and user API control; both JTAG and Active Serial (AS) programming modes are supported
vii. USB Host/Slave Controller with USB type A and type B connectors

viii. SD Card socket
ix. 18 toggle switches
x. 18 red user LEDs
xi. 9 green user LEDs
xii. 4 pushbutton switches
xiii. 50-MHz oscillator and 27-MHz oscillator for clock sources
xiv. 24-bit CD-quality audio CODEC with line-in, line-out, and microphone-in jacks
xv. TV Decoder (NTSC/PAL) and TV-in connector
xvi. VGA DAC (10-bit high-speed triple DACs) with VGA-out connector
xvii. 10/100 Ethernet Controller with a connector
xviii. PS/2 mouse/keyboard connector
xix. RS-232 transceiver and 9-pin connector
xx. IrDA transceiver
xxi. Two 40-pin Expansion Headers with diode protection [125].

The cyclone II FPGA on the DE2 board is configured for the designed system using the SOPC (System-On-Programmable Chip) builder.

5.4.3 System-On-Programmable Chip (SOPC) Builder

The SOPC Builder is software provided by Altera that allows the user to build a complete system using the Graphical User Interface (GUI). The SOPC Builder is made available through the Quartus II software. It helps in the automation of the integration of hardware components. The components that are required for the design of a system are specified by the user using the GUI. The components defined by the user are then converted into HDL files by the builder. A top level HDL file is also generated that connects the components of the system together. The SOPC also provides features to the user that makes the writing of software easier and system simulation faster [126].

5.4.4 SOPC Builder for Soil Monitoring System

The resources required for the implementation of the soil monitoring system on the cyclone II FPGA are selected as shown in figure 5.9. The PLSR algorithm implemented in C language can be easily programmed into the cyclone II FPGA with the help of NIOS II IDE.

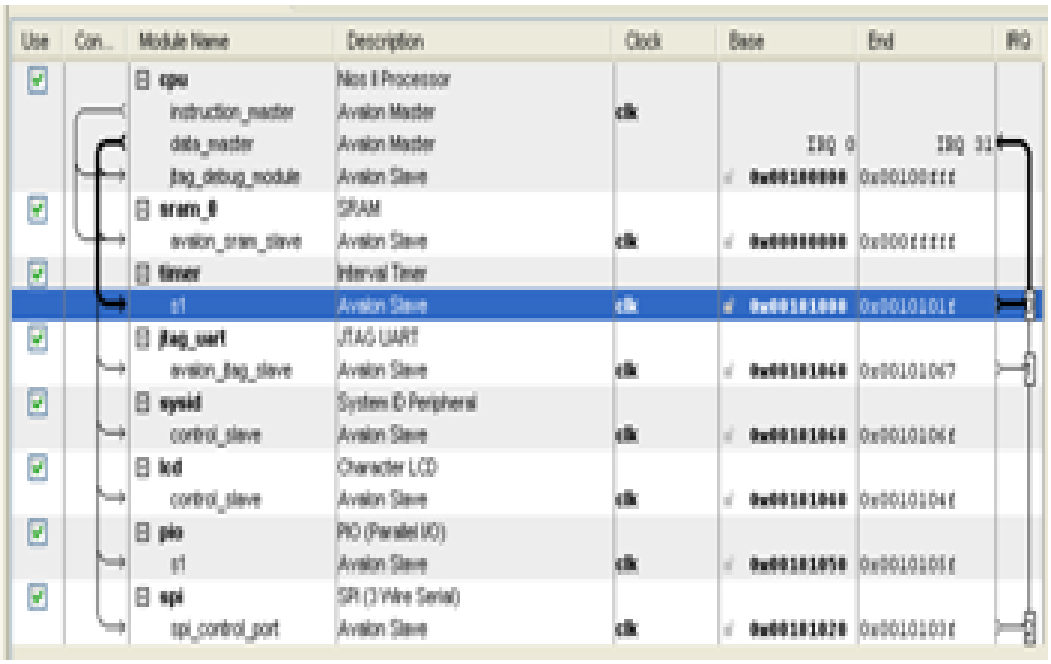

Figure 5.9: Screenshot of SOPC System Components Selection.

The selected components are the NIOS II processor, SRAM, Parallel I/O port, SPI port and LCD display port. Figure 5.10 shows the full system developed for the estimation of soil urea content.

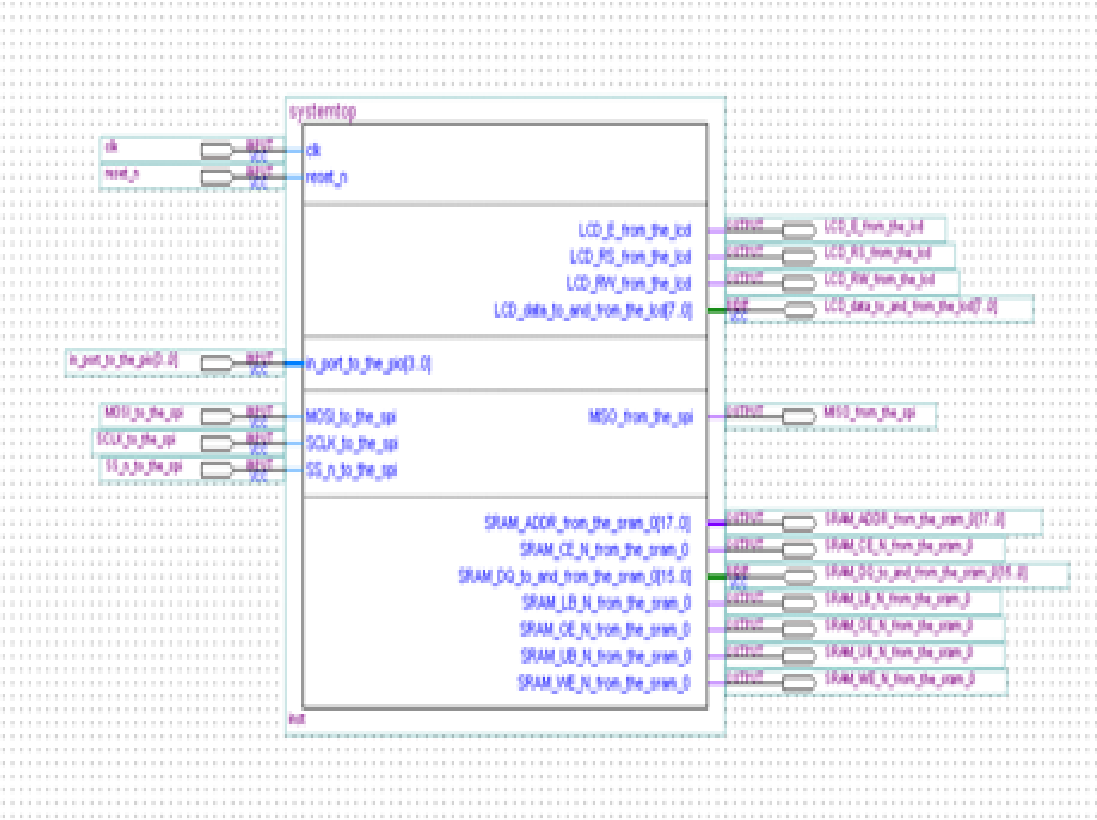

Figure 5.10: Full system implementation

The C code for the implementation of PLSR algorithm is as given in annexure I. The summary of the resources used for the implementation of soil monitoring system is as shown in figure 5.11. The resources used in the system are:

- Total Logic Elements: 2765
- Total combinational functions: 2488
- Dedicated logic registers: 1701
- Total registers: 1701
- Total memory bits: 46208
- Embedded multiplier 9 bit elements: 4

Flow Status	Successful - Fri Jul 10 15:50:37 2015
Quartus II Version	7.2 Build 207 03/18/2008 SP 3 SJ Web Edition
Revision Name	multivariate
Top-level Entity Name	multivariate
Family	Cyclone II
Device	EP2C70F896C6
Timing Models	Final
Met timing requirements	Yes
Total logic elements	2,765 / 68,416 (4 %)
Total combinational functions	2,488 / 68,416 (4 %)
Dedicated logic registers	1,701 / 68,416 (2 %)
Total registers	1701
Total pins	64 / 622 (10 %)
Total virtual pins	0
Total memory bits	46,208 / 1,152,000 (4 %)
Embedded Multiplier 9-bit elements	4 / 300 (1 %)
Total PLLs	0 / 4 (0 %)

Figure 5.11: Summary of the total resources used in the system

The RF data obtained from the soil sensor is processed using PLS algorithm implemented in C for the estimation of unknown concentration of the constituents. The RF spectral data required for the estimation of unknown concentration is read from an external file into the C code running on NIOS II system. This data is stored in the SRAM and is used in SIMPLS algorithm as and when required. The output is displayed on the selected LCD port in the system. The C code for the implementation of PLSR module is discussed in appendix II.

An important requirement for soil sensors for sensing soil constituents using RF spectroscopic technique is that the design of the sensor should be immune to any external electromagnetic interference. This makes it possible to uniquely identify the signatures of the soil constituents in the RF range. The system should have also a high SNR so as to obtain results when the attenuation level of the signal is very high.

In this thesis, a smart soil monitoring system using RF spectroscopic technique and multivariate analysis has been designed and developed. Five different soil constituents are taken for the study. The concentration of each of the soil constituent is varied by a certain amount and the RF response corresponding to each of the concentration is recorded using the soil sensor designed as described in chapter 3.

6.1 RF Responses of the Soil Constituents

The frequency responses of the soil constituents namely urea, potash, phosphate, calcium and NaCl, taken for the study in the frequency range of 10MHz-500MHz are as shown in the figures below.

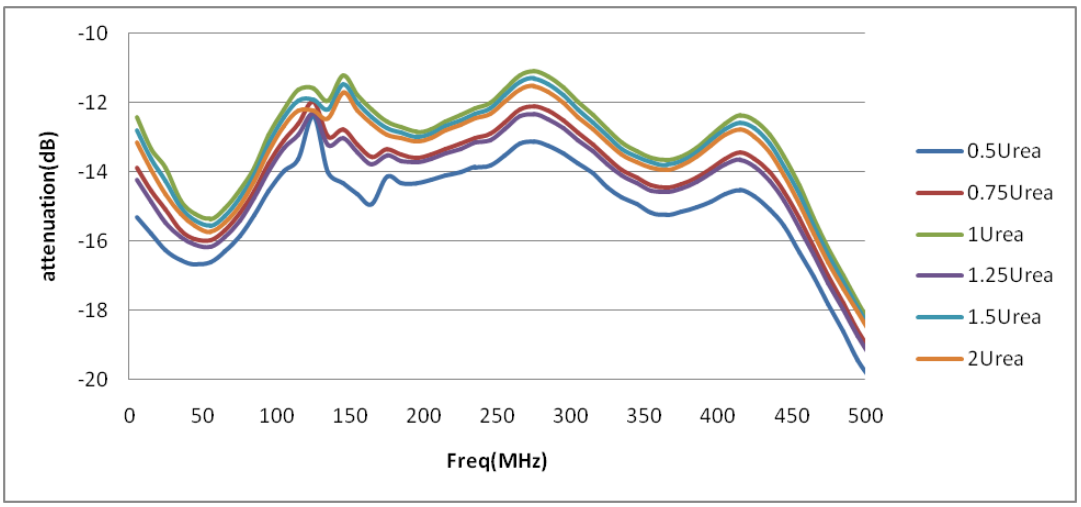

Figure 6.1: RF response of urea for varying concentrations

Figure 6.1 shows the response of urea in the 10MHz-500MHz frequency range. The concentration of urea is changed from 0.5 to 2 (as described in chapter 3) and the corresponding RF responses for each concentration are obtained. It can also be observed from fig.6.1, that as the concentration of urea is changed, there is a corresponding change in the attenuation level. For urea with lower concentration of 0.5, it can be observed that the attenuation is higher and as the concentration of urea is increased the attenuation seems to be decreasing and also that at certain frequencies, the level of attenuation varies substantially as compared to the average attenuation level, thus producing peaks and sometimes dips in the spectra. For example with 0.5Urea, there is no peak present at 150MHz, but as the urea concentration is increased, the peak starts appearing and becomes stronger with the concentration. Similarly, a peak is observed at 190MHz, which is found to disappear as the concentration is increased. Thus, urea gives a unique spectral output in the frequency range of 10MHz-500MHz. This pattern in the spectral output is very useful for building a multivariate system.

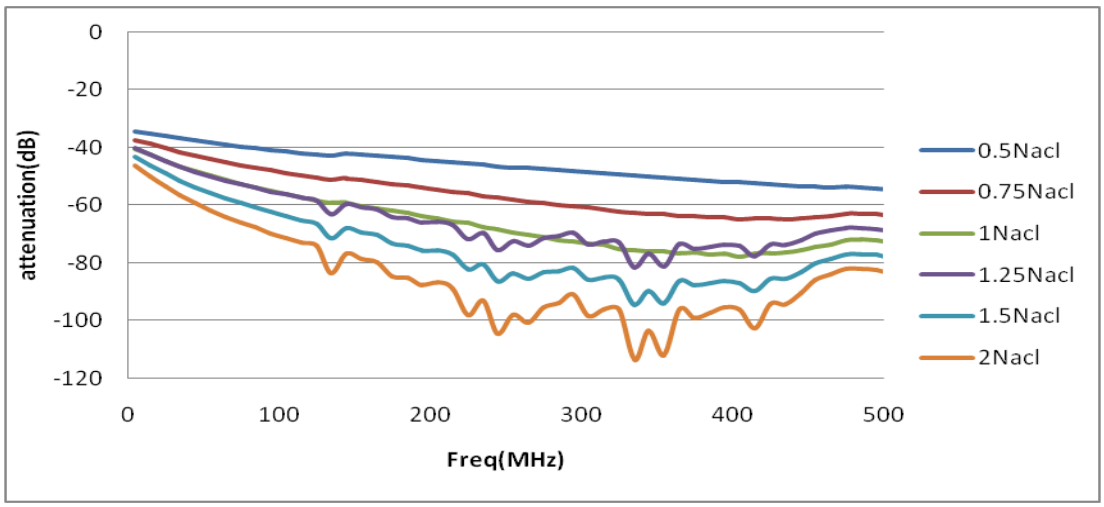

Figure 6.2: RF response of NaCl for varying concentrations

Figure 6.2 shows the spectral response of NaCl in the 10MHz-500MHz frequency range. It is observed that as the concentration of NaCl is changed there is a corresponding change in the attenuation levels of the spectra obtained. It is observed that for NaCl, the attenuation is less for lower concentration, but is found to be increasing for higher concentrations. Also, there are peaks and dips observed at certain frequencies. At 135MHz frequency, it is seen that for lower concentrations of NaCl i.e. for 0.5, 0.75 and 1, there is no dip observed, but for the concentration of 1.25 and above the dip appears and increases as the concentration is increased. Similar situation is observed at 335, 355 and 415MHz frequencies. This behavior is unique to NaCl and as explained earlier these are important parameters for a multivariate system.

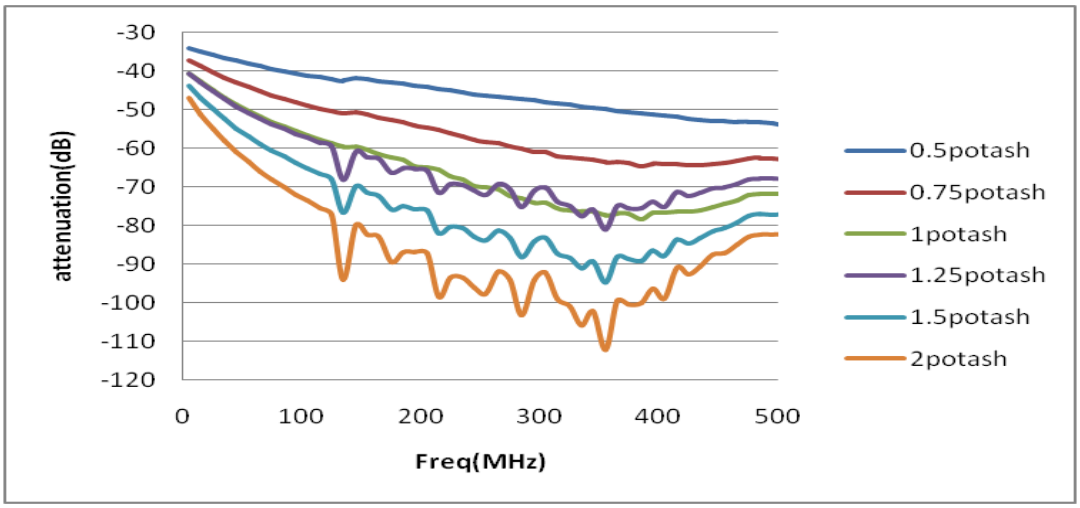

Figure 6.3: RF response of potash for varying concentrations

As seen from figure 6.3, the attenuation levels in the RF spectra of potash are found to be increasing with increase in the concentration. A slight dip can be observed at 135MHz in the 0.5 concentration of potash and as the concentration is increased the dip is found to be increasing. This implies that at 135MHz, the signal absorption in the sample increases as the concentration of potash is increased. Similarly, peaks are found to appear at 265, 295 and 415MHz frequencies, which are found to increase with increase in the concentration of potash. The increase in the peaks at these frequencies indicates that the signal absorption reduces with increase in the concentration of potash.

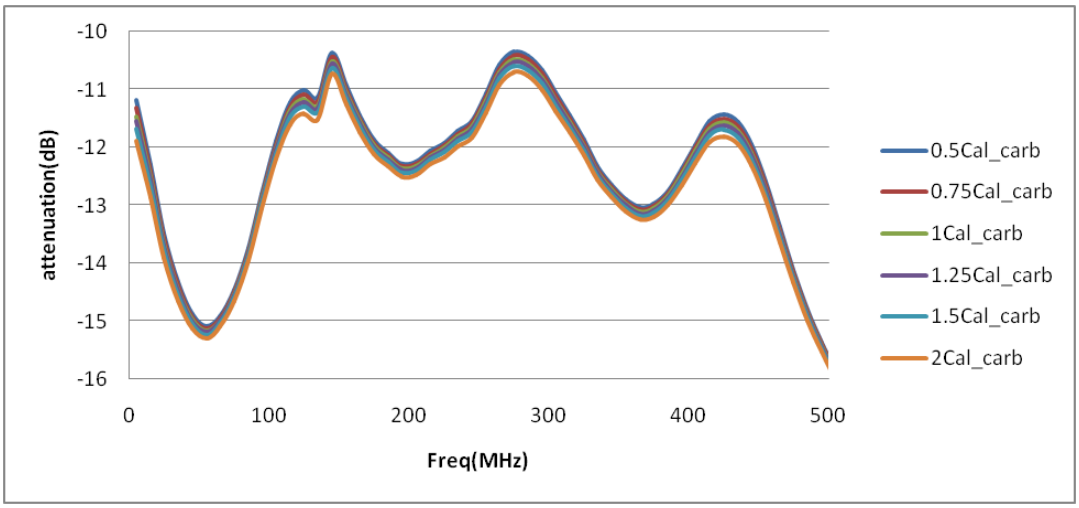

Figure 6.4: RF response of Calcium Carbonate for varying concentrations

Figure 6.4 shows the RF spectra of calcium carbonate for different concentrations. As can be seen from the spectra the variations in the attenuation levels are found to be changing as the concentration of calcium carbonate is changed. It is observed that the attenuation levels change by a very small amount as the concentration is changed. The dip at 55MHz is seen to increase with increase in the concentration levels of calcium carbonate which implies that the signal absorption increases as the concentration is increased. Similar response can be observed at frequencies 135, 145, 195, 275, 365 and 425MHz.

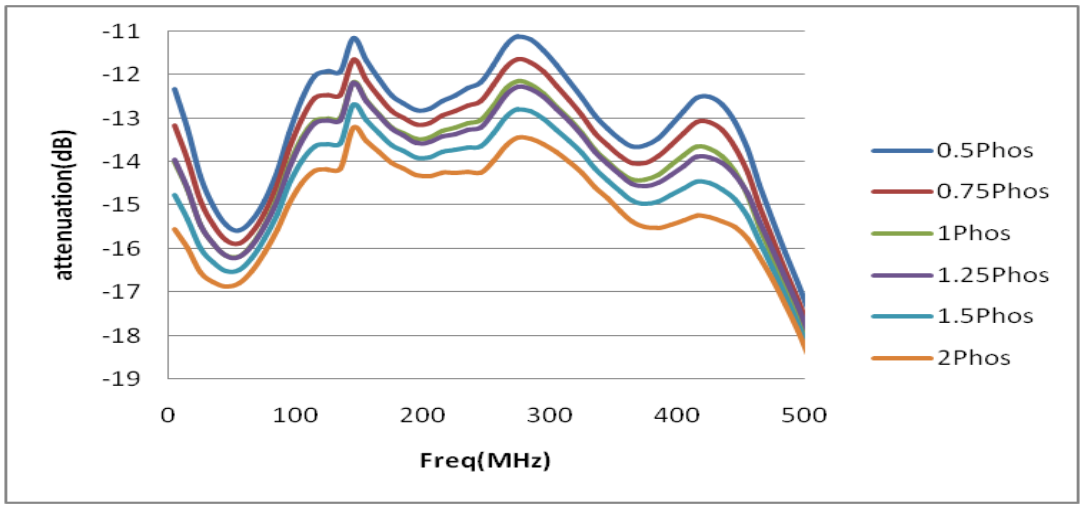

Figure 6.5: RF response of Phosphate for varying concentrations

Figure 6.5 shows the RF spectra of phosphate with varying concentrations. Variations in the attenuation levels as the concentration of phosphate is changed can be observed in the RF spectra. For lower concentration of phosphate, the attenuation in the signal is less, but as the concentration is increased the attenuation is found to increase. The frequencies at which the change in attenuation levels are more pronounced are 45, 145, 275, 365 and 425MHz.

From the spectra of all the soil constituents studied so far, it is observed that when the concentration a particular constituent is changed, a proportionate change in the attenuation level at certain frequencies is observed. Some of these constituents like phosphate and potash are found to have higher variations in the attenuation levels when the concentration is changed, whereas some constituents like calcium carbonate are found to have a small change in the attenuation levels with a change in the concentration. Thus, these spectra can be used for building a multivariate model for the estimation of an unknown concentration of a constituent in a sample.

6.2 RF Spectra of Mixed Samples

Different set of samples are prepared by mixing different concentrations of the constituents taken for the study. The RF spectra of the various samples are as shown in figure 6.6.

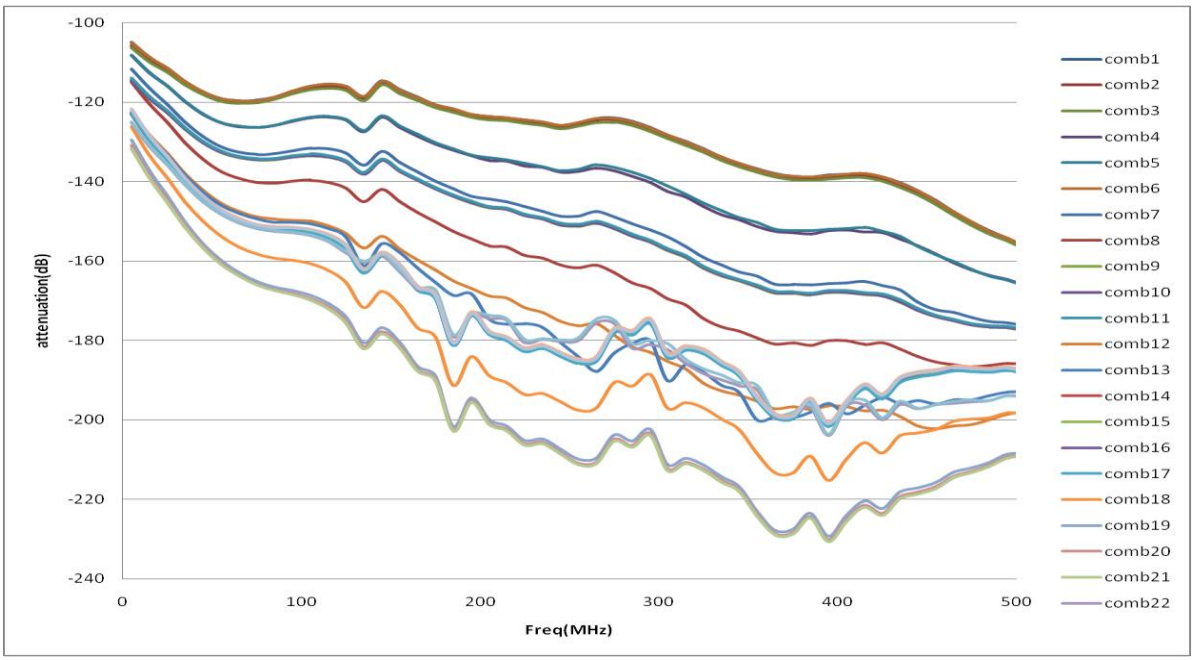

Figure 6.6: RF spectra of different combinations (samples)

The RF spectra obtained as shown in fig. 6.6, shows that the variations in the attenuation levels depend upon the concentrations of each constituent taken for each sample. Hence depending upon the amount of change in concentration of a particular constituent the spectra are observed to follow a pattern. A total of 22 samples are taken and 22 different spectra are obtained. The full sample set of 22 is divided into two parts, of which 16 samples are used in the calibration set for building the PLSR model and the remaining samples are treated as unknowns used in the estimation. The concentration of each constituent for the 16 samples used in the calibration set is as shown in table no. 6.1.

6.3 Estimation of Urea using PLSR Technique

The RF spectra obtained from the soil sensor are passed through a PLSR system used in the estimation of urea content in a given sample. Sixteen of the samples are used as a part of the calibration file to build the PLSR model for the system. The remaining samples are used as unknowns for the estimation. The samples taken for building the PLSR model are as shown in table 6.1. The samples in the calibration file are prepared such that the concentration value of each constituent in the sample varies between the minimum and maximum tolerable values i.e. between 0.5 and 1.5.

Table 6.1: Concentrations of various constituents of 16 samples used in the calibration file

Sample No.	Urea	NaCl	Potash	Calcium	Phosphate
1.	0.5	0.5	0.5	0.5	0.5
2.	0.75	0.75	0.75	0.75	0.75
3.	1	0.75	0.75	0.75	0.75
4.	1.5	1.5	1.5	1.5	1.5
5.	1.25	1.25	1.25	1.25	1
6.	1.5	1.25	1.5	1.25	1.25
7.	0.75	1.25	1.25	0.75	1.5
8.	0.75	1.25	1	1.25	1.25
9.	0.75	1.25	1.25	1.25	0.75
10.	0.5	1	0.5	1	1
11.	0.75	0.5	1	0.5	0.5
12.	0.75	0.75	0.75	1	0.5
13.	1.5	1.5	1.5	1.5	1.25
14.	1.25	1.25	1.25	1.25	1.25
15.	0.5	0.5	0.5	0.5	0.75
16.	1.5	1.25	1.25	1.25	1.25

The system is analyzed under two different situations which are as discussed in the following sections.

6.3.1 Case1: Concentrations of urea in the samples changed from below normal to above normal i.e. from 0.5 to 3.

The effect of change in concentrations of urea from values below normal to above normal on the estimation of urea is studied by keeping all the other components in the sample constant i.e. at their normal value. The samples taken for the study are as shown in table 6.2, along with the results obtained.

Table 6.2: Results of Urea Estimation

Urea	NaCl	Potash	$CaCO_3$	Phosphate	Urea_Actual	Urea_estim	RMSE	%Error
0.5	1	1	1	1	112.5	111.25	1.245	0.88
0.75	1	1	1	1	168.75	167.91	0.836	0.49
1	1	1	1	1	225	225.04	0.035	0.017
1.25	1	1	1	1	281.25	281.51	0.265	0.09
1.5	1	1	1	1	337.5	338.18	0.685	0.2
2	1	1	1	1	450	451.77	1.775	0.39
2.5	1	1	1	1	562.5	540.9	21.598	3.84
3	1	1	1	1	675	630.03	44.967	6.66

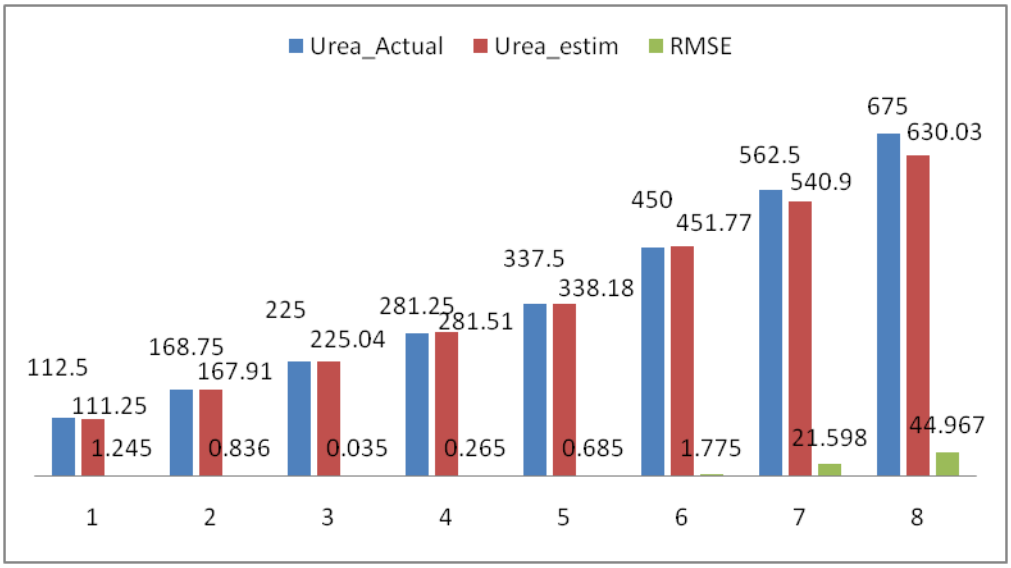

Figure 6.7: Chart representing the actual and estimated values of urea along with the RMSE.

It is observed from the bar graph shown in figure 6.7, that when the concentration of urea is at the normal value i.e. 1, with all other constituents also at their normal value, the RMSE obtained is minimum, i.e. at 0.035, and as the concentration of urea is changed below and above the normal values, there is a gradual increase in the RMSE value. This indicates that the PLSR model can estimate urea concentrations in a sample with low errors when it lies within the normal range (as given in table no. 6.1) of the concentrations. When the concentration of urea in a sample goes beyond the normal range, then the RMSE in the estimation of urea is found to increase rapidly. This implies that in a soil sample if the concentration of urea lies within the normal range then it can give a proper estimation of the urea concentration, whereas if the urea concentration is beyond the normal range then the RMSE for that particular sample will be high, indicating high or low value of urea.

6.3.2 Case 2: Keeping urea concentration constant and changing the concentrations of other constituents.

This case is considered to study the effect on the estimation of urea, when one of the constituent concentrations is changed with all the other constituents in the sample kept constant at their normal value. The calibration file for the testing is the same as shown in table no.6.1 above. The samples taken for studying the effect of change in the concentrations of various constituents are as shown in table 6.3 to table 6.6.

Table 6.3: NaCl concentration changing with all other components constant

Urea	NaCl	Potash	$CaCO_3$	Phosphate	Urea_Actual	Urea_estim	RMSE	%Error
1	0.5	1	1	1	225	214.36	10.63	4.73
1	0.75	1	1	1	225	224.66	0.33	0.151
1	1	1	1	1	225	225.04	0.035	0.017
1	1.25	1	1	1	225	224.02	0.976	0.435
1	1.5	1	1	1	225	223.93	1.071	0.475
1	2	1	1	1	225	223.28	1.724	0.76
1	2.5	1	1	1	225	251.09	26.09	11.59
1	3	1	1	1	225	278.58	53.58	23.81

Table 6.3 shows the results obtained in the estimation of urea when the concentration of NaCl is changed from 0.5 to 3, i.e. from below normal to above normal. The results are also depicted in the bar graph as shown in figure 6.8.

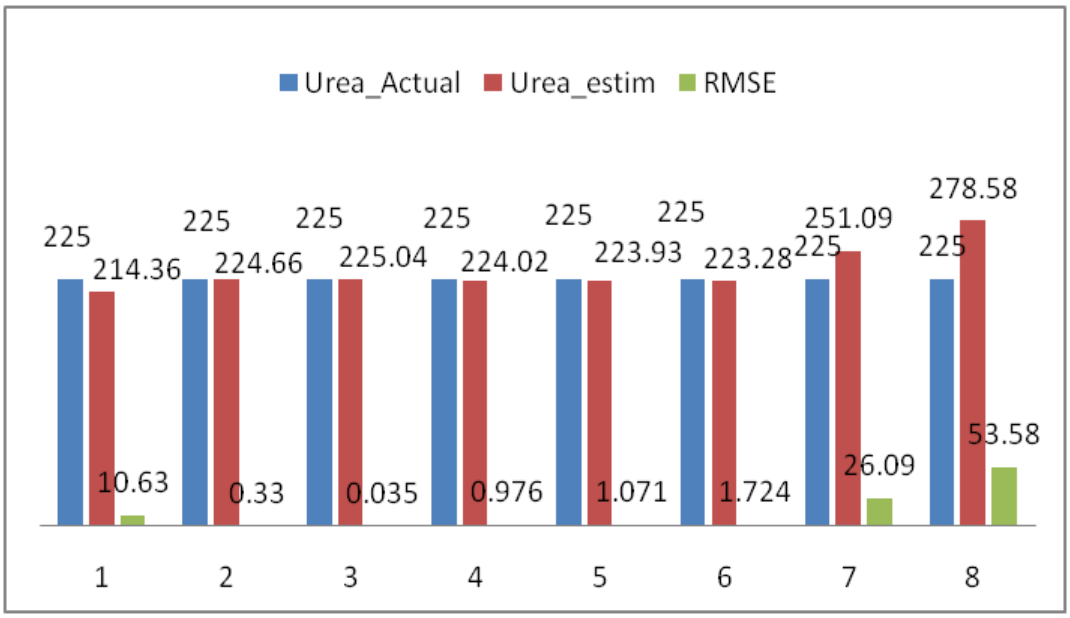

Figure 6.8: Chart representing the effect of change in NaCl concentration values on Urea estimation

As seen from table 6.3 and figure 6.8, the change in the concentration values of NaCl within the tolerable range has very little effect on the estimation of urea. But as the concentration values are increased, the rate of error in the estimation of urea is found to be increasing. Between the concentrations of 0.75 and 2, the RMSE values are found to be very low, but below 0.75 and above 2, the RMSE is found to be very high. This implies that whenever the amount of NaCl in a soil sample lies outside the range of tolerable values, the error rate in the estimation of urea is high. Hence for the estimation of urea in a sample, if the NaCl values are within the normal range then urea is estimated with a higher accuracy or else to estimate the urea in higher ranges a multivariate block should be built taking into account these factors.

Table 6.4: Potash concentration changing with all other components constant

Urea	NaCl	Potash	$CaCO_3$	Phosphate	Urea_Actual	Urea_estim	RMSE	%Error
1	1	0.5	1	1	225	216.8	8.191	3.64
1	1	0.75	1	1	225	225.85	0.846	0.37
1	1	1	1	1	225	225.04	0.035	0.017
1	1	1.25	1	1	225	228.44	3.44	1.53
1	1	1.5	1	1	225	227.18	2.181	0.97
1	1	2	1	1	225	229.78	4.775	2.12
1	1	2.5	1	1	225	303.22	78.22	34.76
1	1	3	1	1	225	388	163.1	72.44

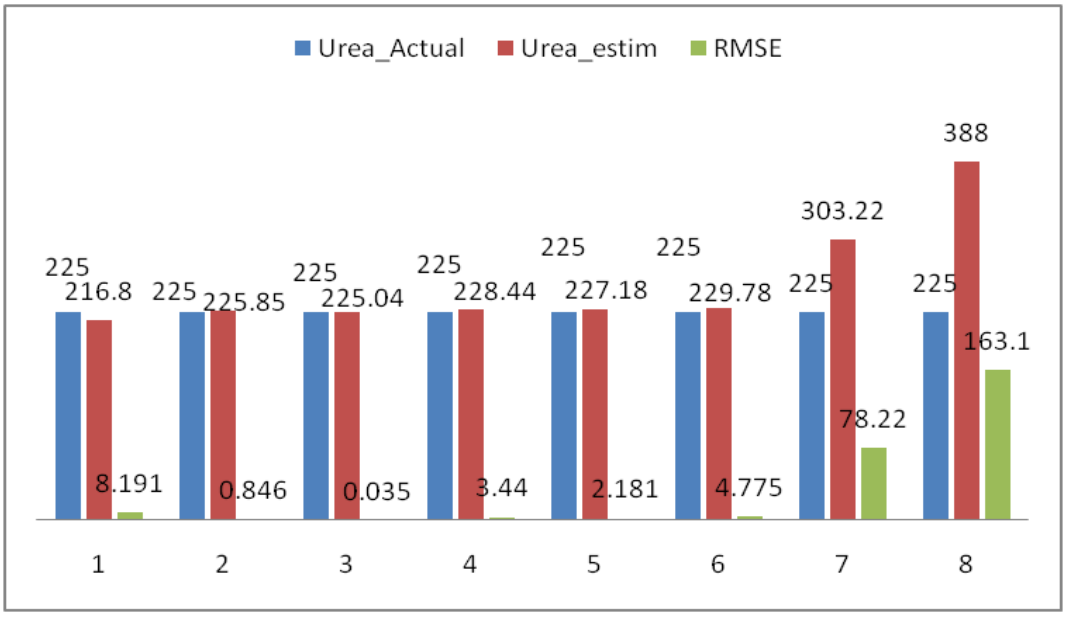

Figure 6.9: Chart representing the effect of change in potash concentration values on urea estimation

As seen from table 6.4 and figure 6.9, the change in the concentration of potash within the normal range has very little effect on the estimation of urea. This can be observed from the RMSE values obtained for the estimation of urea with potash concentrations in the normal range. But when the concentration values are increased beyond the normal range, the RMSE in the estimation of urea is found to be increasing.

This implies that whenever the amount of potash in a soil sample lies outside the normal range, then the error rate in the estimation of urea is high. If the table no. 6.4 is compared with table no. 6.3, it can be seen that the RMSE values in the estimation of urea are much higher in case of potash with values above the normal range as compared to that of NaCl.

Table 6.5: $CaCO_3$ concentration changing with all other components constant

Urea	NaCl	Potash	$CaCO_3$	Phosphate	Urea_Actual	Urea_estim	RMSE	%Error
1	1	1	0.5	1	225	219.35	5.644	2.51
1	1	1	0.75	1	225	223.49	1.504	0.67
1	1	1	1	1	225	225.04	0.035	0.017
1	1	1	1.25	1	225	221.66	3.33	1.48
1	1	1	1.5	1	225	222.77	2.23	0.99
1	1	1	2	1	225	228.03	3.026	1.35
1	1	1	2.5	1	225	228.17	3.165	1.41
1	1	1	3	1	225	228.3	3.3	1.47

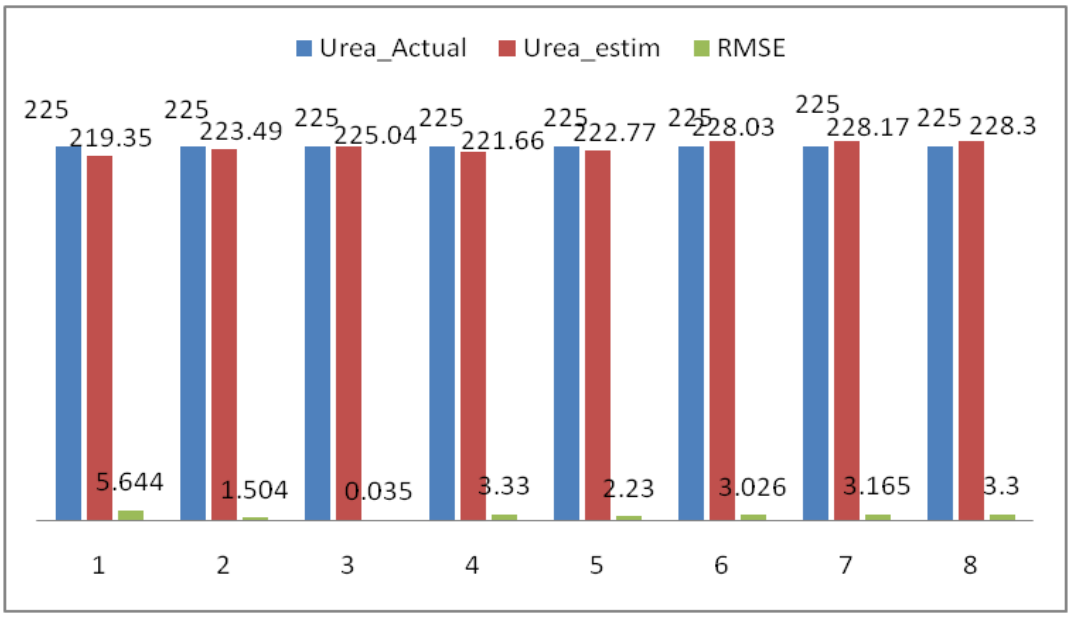

Figure 6.10: Chart representing the effect of change in $CaCO_3$ concentration values on urea estimation

From table no.6.5 and figure 6.10, it can be observed that the change in the concentration values of $CaCO_3$ within the normal range has very little effect on the estimation of urea. If the concentration values of $CaCO_3$ are increased above the normal range, then the RMSE in the estimation of urea is found to be increasing though by a very small amount. This implies that changing the concentration of $CaCO_3$ in a sample does not have much effect on the estimation of urea.

Table 6.6: Phosphate concentration changing with all other components constant

Urea	NaCl	Potash	$CaCO_3$	Phosphate	Urea_Actual	Urea_estim	RMSE	%Error
1	1	1	1	0.5	225	225.73	0.737	0.32
1	1	1	1	0.75	225	224.85	0.145	0.06
1	1	1	1	1	225	225.04	0.035	0.017
1	1	1	1	1.25	225	223.64	1.36	0.604
1	1	1	1	1.5	225	223.37	1.634	0.724
1	1	1	1	2	225	222.16	2.84	1.26
1	1	1	1	2.5	225	229.36	4.36	1.94
1	1	1	1	3	225	232.85	7.852	3.49

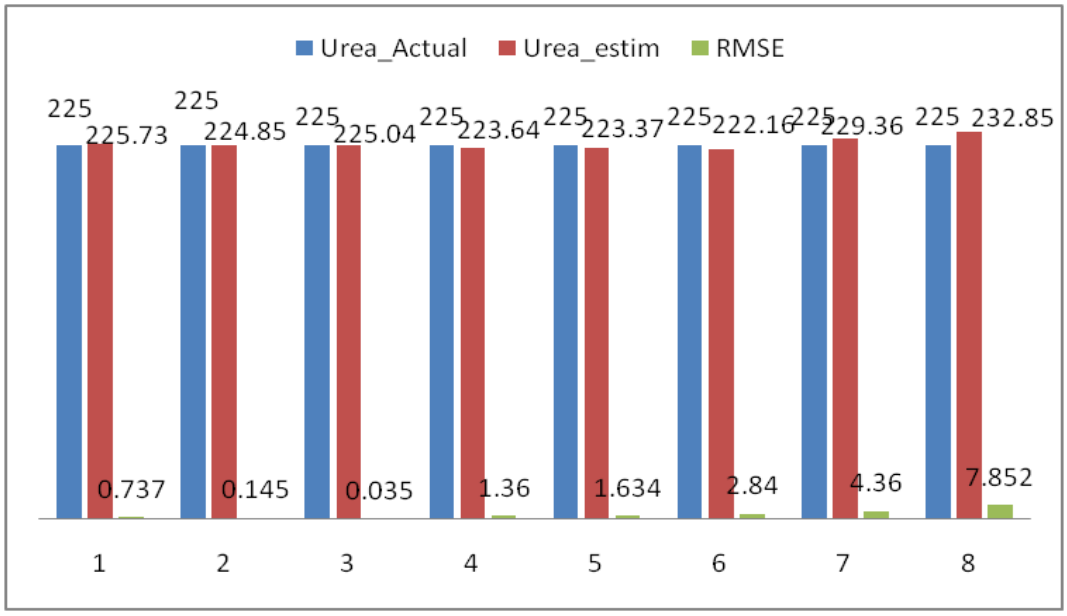

Figure 6.11: Chart representing the effect of change in phosphate concentration values on urea estimation

As seen from table 6.6 and figure 6.11, the change in the concentration values of phosphate within the normal range has very little effect on the prediction of urea. But as the concentration values are increased, the RMSE in the estimation of urea is found to be increasing very slowly and gradually. This implies that the amount of phosphate present in a soil sample does not have much effect on the estimation of urea content in a soil sample.

Hence it can be concluded that, when the concentrations of potash and NaCl are beyond the normal range, the estimation of urea gives wrong results, since the values of RMSE are high in both the cases. In case of $CaCO_3$ and phosphate, it is observed that if both these constituents have concentration values beyond the normal range in a sample, the effect on the estimation of urea is not much because lower RMSE values are obtained.

6.3.3 Farmer Friendly Interface for Urea Monitoring

The FPGA module discussed above is more of technical in nature and requires an exposure in the area of Quartus II software and working of NIOS II processor. It is explained in detail how various constituents play their role in the estimation of urea. It may be seen that if constituents like NaCl and Potash vary little more than their normal value, the prediction error of urea rises exponentially. However, these numbers given by the FPGA about RMSE and percentages are difficult for a common man to understand. Therefore, this particular section explains how a simple interface is developed for information about the urea content. The primary display of information is LCD display of DE2 board as explained below.

i) For user friendly interface an algorithm in C was developed as given in figure 6.12. Since urea is the main topic of investigation, the flowchart is customized for urea percentage in soil. The message displayed on the LCD is not the value of the unknown concentration estimated, but it gives output such as “Urea Below Normal”, “Urea Above Normal” and “Urea Normal”.

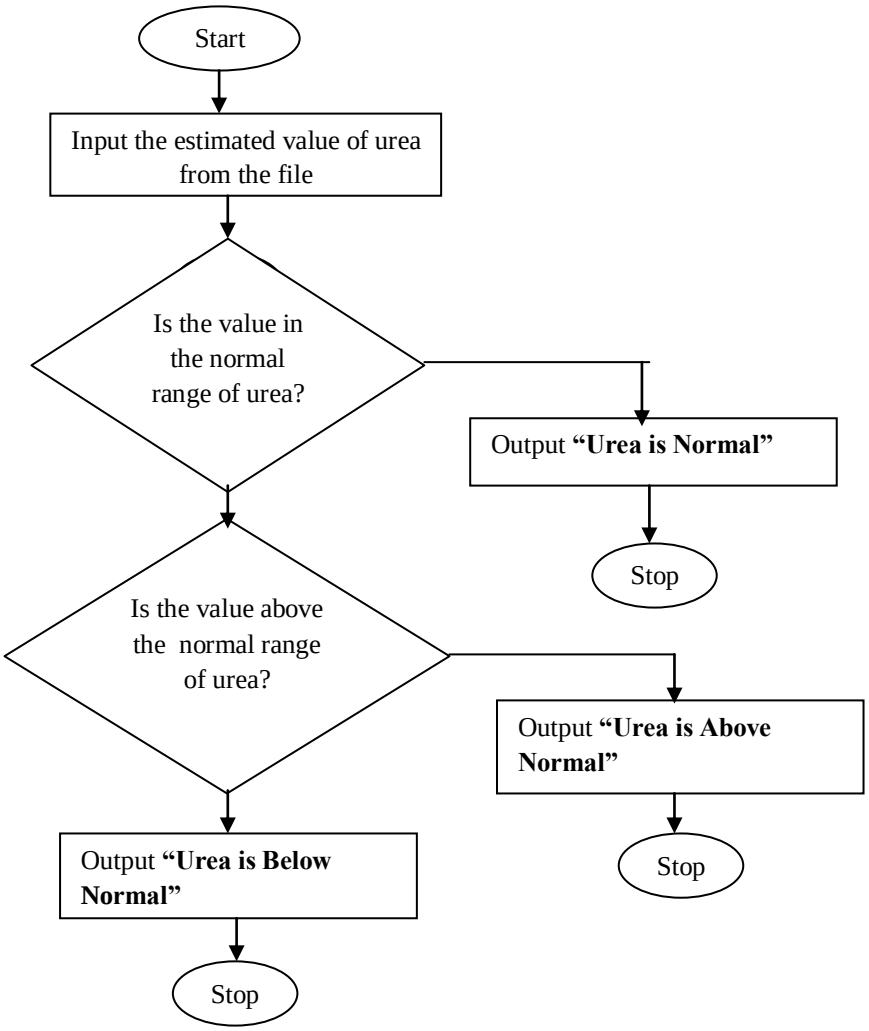

Figure 6.12: Flowchart for the output display

Figure 6.13 is the photographs of DE2 board LCD display for three different conditions of urea in soil.

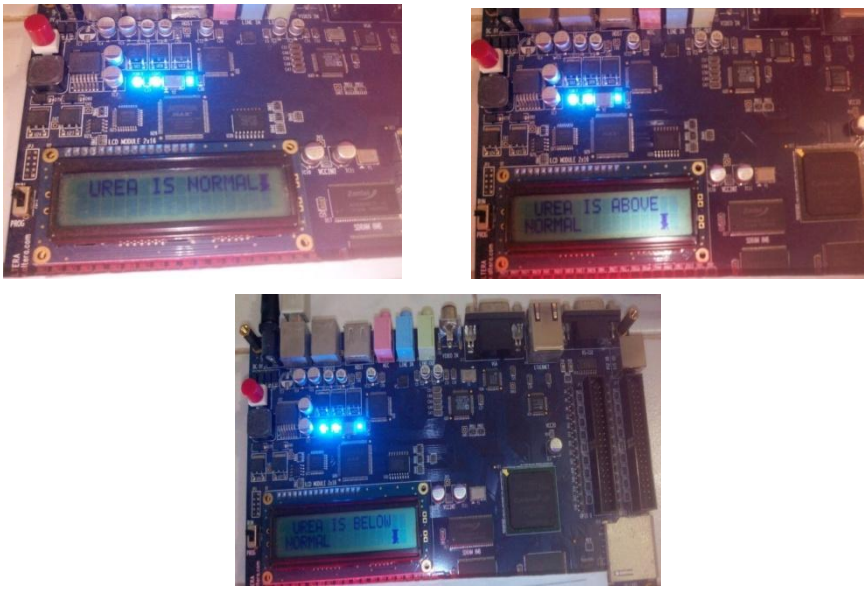

Figure 6.13: photographs of DE2 board LCD display

It is also possible to modify this display in terms of urea double, urea triple etc. Since the thesis mainly deals with the feasibility of using VLSI for estimation of urea, therefore the output of the program is kept simple in form.

However, the farmer who would be the likely end user of this product, if gets keen to know the other parameters of the soil he can go back to the earlier described methodology to obtain the exact numbers for these constituents.

6.4 Conclusion

The thesis covers the design and development of soil sensor based on RF dielectric absorption cell. The technique proposed here uses RF signals in the range of 10MHz-500 MHz and the analysis of the detected spectra of the soil sample for urea signature. In this thesis development of a novel Soil Monitoring System is explained using RF spectroscopy as a sensor. Embedded technology is used to analyze the spectra received from the above sensor. An Altera DE2 board configured with NIOS II soft-core platform

and having target as CYCLONE II (EP2C6) is used to estimate the urea content in soil in the RF range of 10MHz-500MHz. SIMPLS algorithm for PLSR model is developed using the C language and is embedded on the NIOS II platform for the estimation of urea concentration. The designed sensor was tested for its precision by recording the spectra of a particular component over a number of times, which was found to be repeating. The working of the PLSR model was checked by calculating percentage error obtained in estimation of urea under different conditions. It was found that the error rates for estimated urea are within the acceptable levels as observed from the literature reviews of some instruments used in soil testing like ECH2O of Decagon Devices Inc., CT of Tektronix and WTR of Campbell Scientific, Inc. where the error rates are found to vary from 3.5 percent to 7.1 percent. A user friendly interface for layman in this area of technology has been developed which displays the results of analysis in terms of three parameters such as “Urea Normal”, “Urea High”, and “Urea Low”. Thus the soil monitoring system developed in this study can be used even by a farmer for the urea content in a sample with error rates lying within the acceptable values required for device development.

6.5 Future Scope

The study can be extended for the estimation of other constituents in a sample. The device can be developed further for the testing of on field soil samples. Though the RF spectra was recorded for a range of 10MHz-4.4.GHz, only a specific range of frequencies of 10MHz-500MHz was used for the building of PLSR model. This was done since it was observed that at higher frequencies the response becomes somewhat erratic, giving

erroneous output for certain concentrations. The response of the spectra at higher frequencies can be made better by using noise suppressing techniques and a higher frequency range can be used for the study. Further, the full system can be miniaturized by designing oscillators which can generate specific frequencies in the range where the variations are observed. The soil monitoring system designed uses FPGA for running the PLSR algorithm and the recording of spectra is done using SNA. The system can be modified by embedding oscillators into the FPGA, thus making it fully portable.

ANNEXURE I

Screenshots of ParLes Software for Urea Estimation

To build the multivariate model for urea estimation, the calibration file and the sample file for prediction is imported into the software using the Data In tab on the software interface. The number of y variables is set to 5 and the 1st y variable is selected for the modeling. The screenshot for importing data is shown in figure I.1.

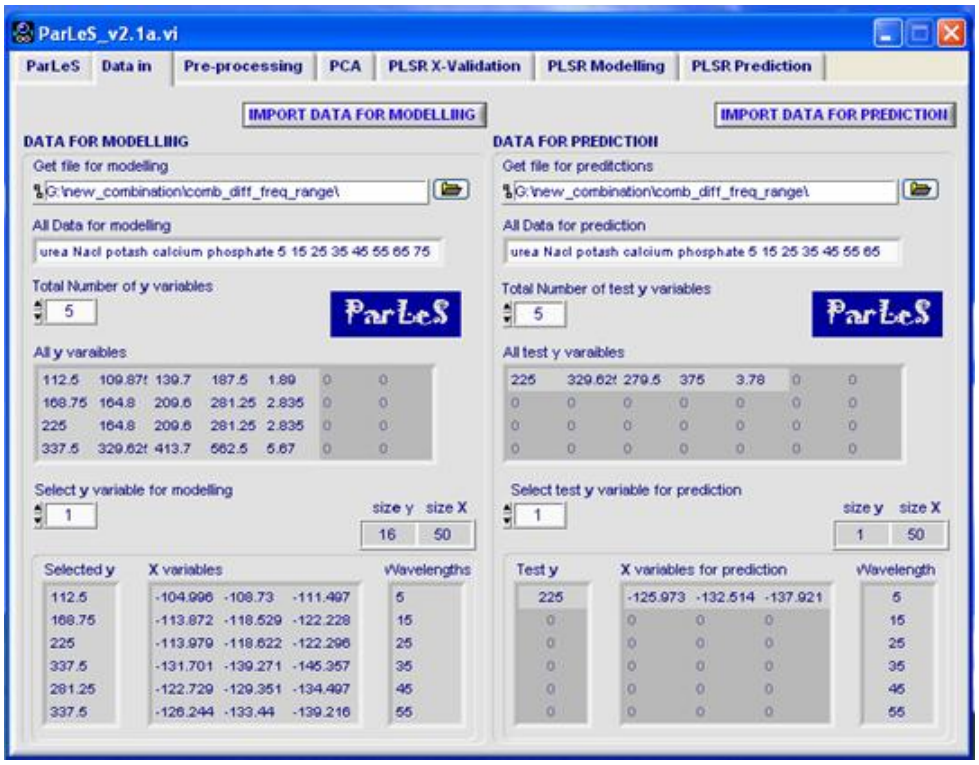

Figure I.1: Importing data from file

The software consists of pre-processing treatment to be used on the spectra to filter out noise signals. The screenshot is shown in figure I.2.

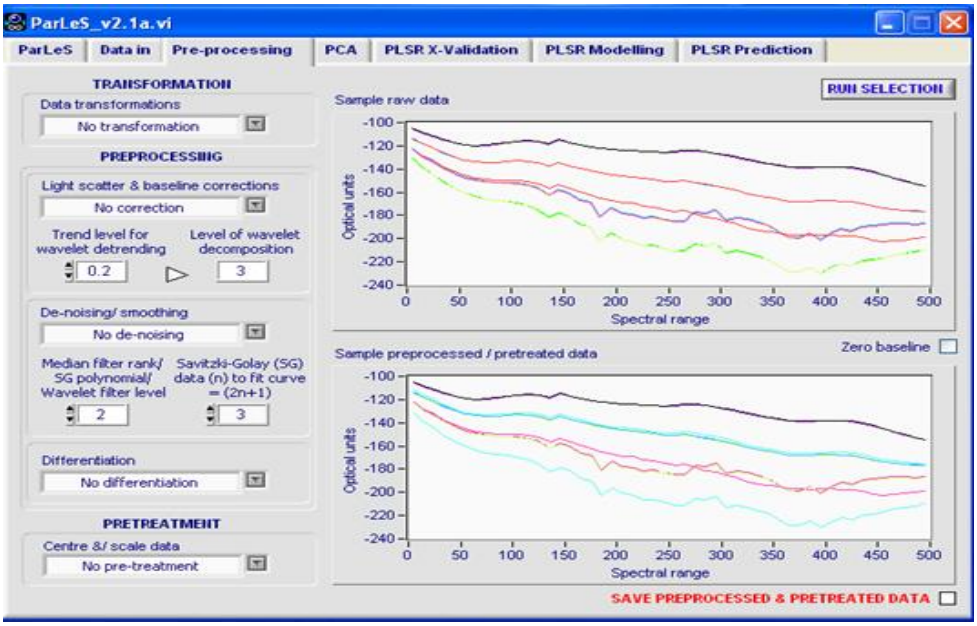

Figure I.2: Screenshot of preprocessing techniques

The PCA screen requires the selection of the number of factors to be extracted. The number of factors selected in this case is ten.

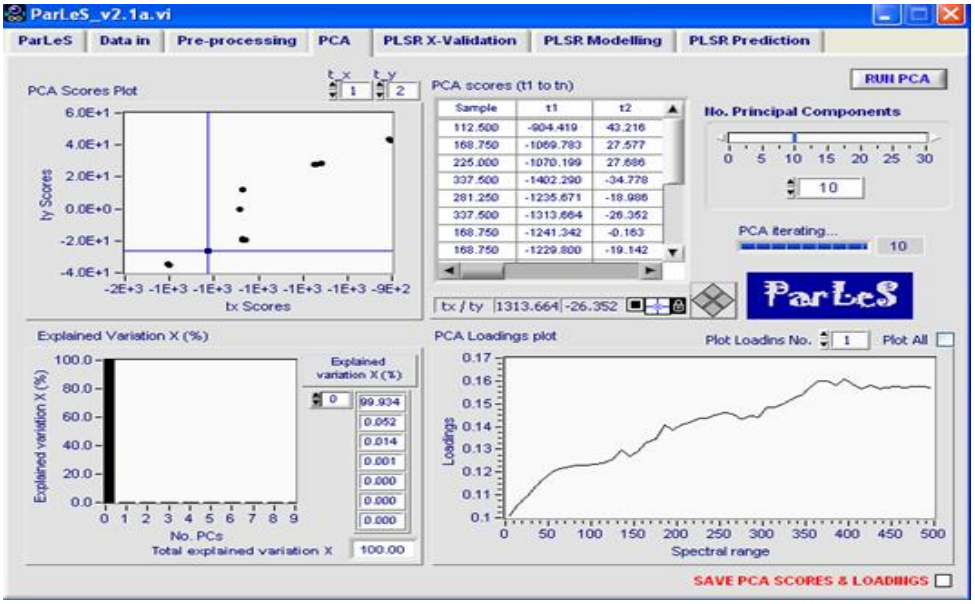

Figure I.3: Screenshot of PCA

The next screen as shown in figure I.4 is the PLSR X-Validation, which requires the selection of the number of factors for X-validation.

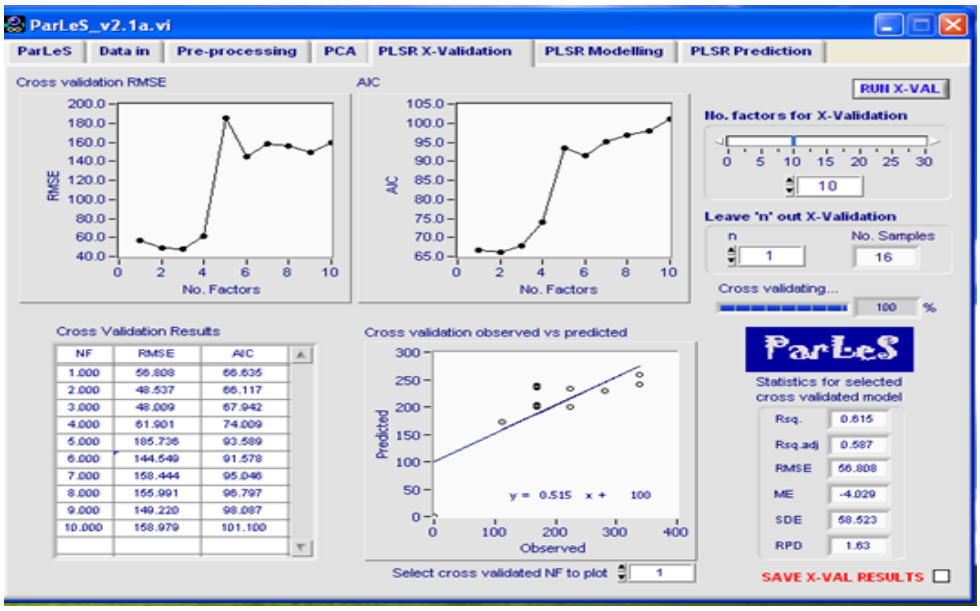

Figure I.4: Screenshot of PLSR X-Validation

The PLSR Modeling requires the selection of the number of factors for PLS as shown in figure I.5.

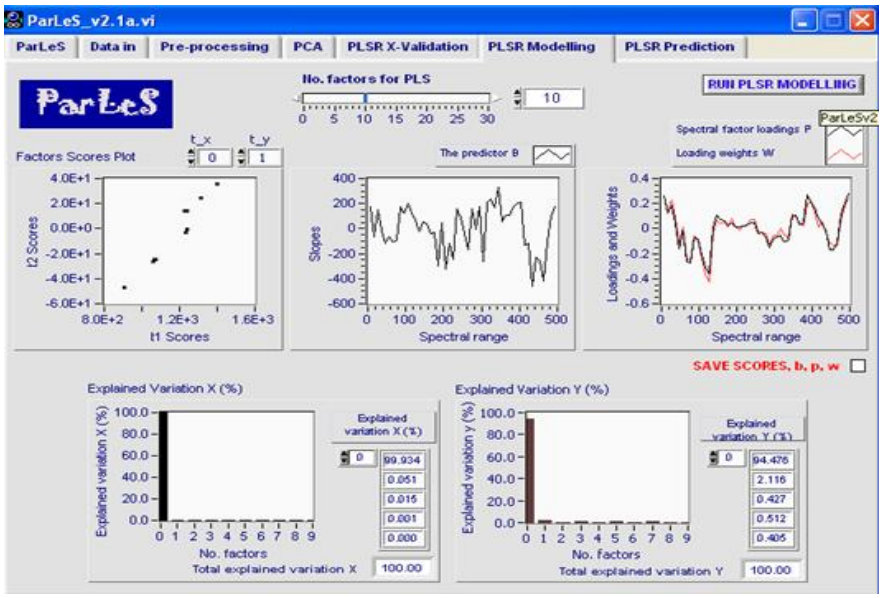

Figure I.5: Screenshot for PLSR Modeling

The last part of the ParLes software is the PLSR Prediction which gives the estimated value of the selected y variable. The screen alongwith the estimated value also provides the RMSE values, the R2 value etc. as shown in figure I.6.

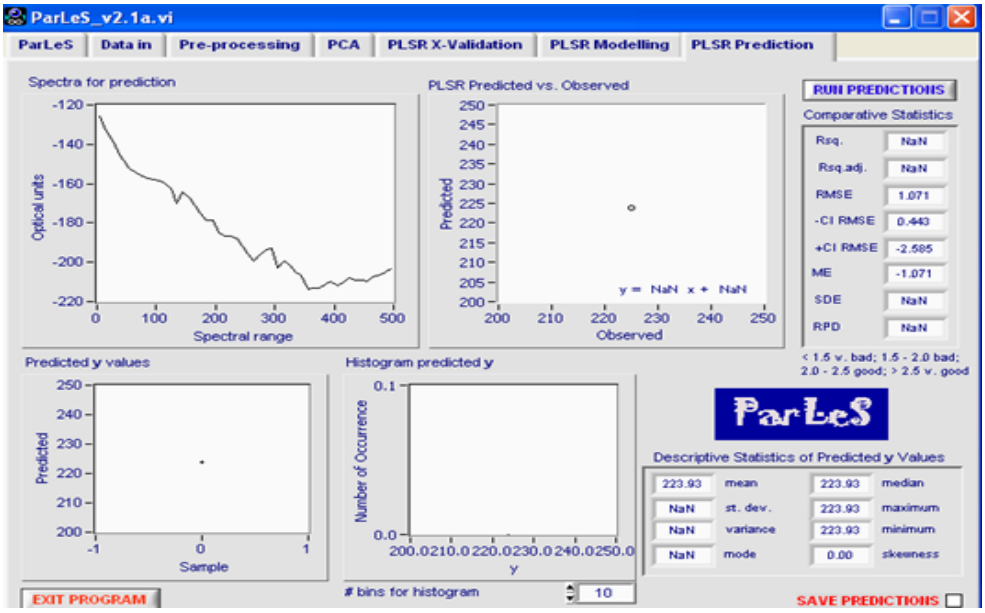

Figure I.6: Screenshot of PLSR Prediction

Annexure II

Code for SIMPLS algorithm

```
#include <stdio.h>
#include <math.h>
#include <float.h>
#define ROW_1 4
#define COL_1 4
#define ROW_2 4
#define COL_2 4
#define N 4
double** sub(double** ,double** ,int );
double add(double** ,int ,int);
double** wpq(double** ,int ,int);
double** div(double**,int,int,double);
double** col(double**,int,int);
void Jacobi_Cyclic_Method(double eigenvalues[COL_1], double
*eigenvectors[COL_1][COL_1],double *P, int n);
double** iden(int);
double** trans(double**,int,int);
double** init(double**,int,int);
double** set(double**,int,int);
void get(double**,int,int);
double** mult(double**,double**,int,int,int);

void main()
{
 int i,j;    //row1=0,col1=1,row2=0,col2=0;
double
**matrix1,**matrix2,**AO,**MO,**trans1,**CO,**AO_trans,**g,M[COL1][COL1];
double eigenvalues[COL_1],**qh,**Wh,**Wh_mat,**Ch,**W,**ph,**p,**q,**vh;
double eigenvectors[COL_1][COL_1],Ch_sq,m=2.0,**X_pre;
double  **v_trans,**C1,**p_trans,**M1,**A1,**q_trans,**B,**T,av_vh;
```

```
clrscr();
matrix1=init(matrix1,ROW_1,COL_1);
matrix2=init(matrix2,COL_2,COL_2);
set(matrix1,ROW_1,COL_1);
set(matrix2,ROW_2,COL_2);
clrscr();
trans1=trans(matrix1,COL_1,ROW_1);
AO=mult(trans1,matrix2,COL_1,COL_2,ROW_1);
MO=mult(trans,matrix1,COL_1,COL_1,ROW_1);
CO=iden(COL_1);
AO_trans=trans (AO,COL_2,COL_1);
g=mult(AO_trans,AO,COL_2,COL_2,COL_1);
        for(i=0;i<COL_1;i++)
            {
                for(j=0;j<COL_1;j++)
                  {
                    M[i][j]=*(*(g+i)+j);
                    }
         }
     Jacobi_Cyclic_Method (eigenvalues,*eigenvectors,*M,COL_1);
        qh=init(qh,COL_1,COL_1);
                for(i=0;i<COL_1;i++)
                    {
                       for(j=0;j<COL_1;j++)
                            {
                                  if(i==j)
                                 qh[i][j]=eigenvalues[i];
                                 else
                                qh[i][j]=0.0;
                             }
                      }

         Wh=mult(AO,qh,COL_1,COL_1,COL_2);
```

```
Wh_mat=col(Wh,COL_1,COL_1);
Ch=trans(Wh_mat,1,COL_1);
Ch=mult(Ch,MO,1,COL_1,COL_1);
Ch=mult(Ch,Wh_mat,1,1,COL_1);
Ch_sq=sqrt(**Ch);
Wh_mat=div(Wh_mat,COL_1,1,Ch_sq);
W=wpq(Wh_mat,COL_1,1);

Wh_mat=col(W,COL_1,1);
ph=mult(MO,Wh_mat,COL_1,1,COL_1);
p=wpq(ph,COL_1,1);

Wh_mat=col(W,COL_1,1);
qh=mult(AO_trans,Wh_mat,COL_2,1,COL_1);
q=wpq(qh,COL_2,1);

 ph=col(p,COL_1,1);
 vh=mult(CO,ph,COL_1,1,COL_1);
 av_vh=add(vh,COL_1,1);
 av_vh=av_vh/m;
 vh=div(vh,COL_1,1,av_vh);
 v_trans=trans(vh,1,COL_1);
 C1=mult(vh,v_trans,COL_1,COL_1,1);
 C1=sub(CO,C1,COL_1);

 p_trans=trans(ph,1,COL_1);
 M1=mult(ph,p_trans,COL_1,COL_1,1);
 M1=sub(MO,M1,COL_1);
 A1=mult(CO,AO,COL_1,COL_2,COL_1);

 q_trans=trans(q,1,COL_1);
 B=mult(W,q_trans,COL_1,COL_1,1);
 T=mult(matrix1,W,ROW_1,1,COL_1);
```

```
            get(T,ROW_1,1);
             ph=trans(p,1,COL_1);
             X_pre=mult(T,ph,ROW_1,COL_1,1);
             matrix1=trans(matrix1,COL_1,ROW_1);
             X_pre=trans(X_pre,COL_1,ROW_1);
             get(X_pre,COL_1,ROW_1);

           getch();
           free(matrix1);
           free(matrix2);

} /* end main */

double** init(double** arr,int row,int col)
{
 int i=0,j=0;
 arr=(double**)malloc(sizeof(double)*row*col);
             for(i=0;i<row;i++)
                 {
                         for(j=0; j<col; j++)
                        {
                          *((arr+i)+j)=(double*)malloc(sizeof(double));
                          *(*(arr+i)+j)=0.0;
                         }
                 }
            return arr;
   }

double** set(double** arr, int row,int col)
{
 int i=0,j=0;
 double val=0.0;
     for(i=0; i<row; i++)
```

```
        {
            for(j=0; j<col; j++)
              {
                printf("Enter value for row %d col %d  :",(i+1),(j+1));
                scanf("%lf", &val);
               *(*(arr+i)+j)=val;
              }
        }
      return arr;
  }

void get(double** arr, int row,int col)
{
    int i=0,j=0;
      for(i=0; i<row; i++)
        {
            for(j=0; j<col; j++)
              {
                printf("%lf\t",*(*(arr+i)+j));
              }
            printf("\n");
          }
    }

double** mult(double** arr1,double** arr2,int row,int col,int col1)
{
 double  **result;
 int i=0,j=0,k=0;
 result=init(result, row, col);
```

```
        for(i=0; i<row; i++)
          {
                for(j=0; j<col; j++)
                  {
                    for(k=0; k<col1; k++)
                     {
                        *(*(result + i)+j)+=(*(*(arr1+i)+k))*(*(*(arr2+k)+j));
                         if (k!=(col1-1))
                        printf ("+");
                     }
                        printf("\t");
                  }
              printf("\n");
              }
 return (result);
}

double** trans(double** arr, int row1,int col1)
{
double **trans1;
int i,j;
trans1=init(trans,row1,col1);
        for(i=0;i<col1;i++)
          {
              for(j=0;j<row1;j++)
              *(*(trans1+j)+i)=*(*(arr+i)+j);
          }
    return trans1;
}

double** iden(int dim)
{
double **CO;
```

```
int i,j;
CO=init(CO, dim, dim);
        for(i=0;i< dim; i++)
              {
                for(j=0;j< dim; j++)
                  {
                      if(i==j)
                         {
                              CO[i][j]=1.0;
                          }
                       else
                           {
                              CO[i][j]=0.0;
                            }
                    }
              }
    return CO;
}


void Jacobi_Cyclic_Method(double eigenvalues[N], double *eigenvectors[N][N],double
*A, int n)
{
  int row, i, j, k, m;
  double *pAk, *pAm, *p_r, *p_e;
  double threshold_norm;
  double threshold;
  double tan_phi, sin_phi, cos_phi, tan2_phi, sin2_phi, cos2_phi;
  double sin_2phi, cos_2phi, cot_2phi;
  double dum1;
  double dum2;
  double dum3;
  double r;
  double max;
```

```
 if ( n < 1)
     return;
 if ( n == 1)
        {
               eigenvalues[0] = *A;
                *eigenvectors[0][0] = 1.0;
            return;
    }

 for (p_e = eigenvectors, i = 0; i < n; i++)
   for (j = 0; j < n; p_e++, j++)
      if (i == j)
      *p_e = 1.0; else *p_e = 0.0;

for (threshold = 0.0; pAk = A; i = 0; i < ( n - 1 ); pAk += n; i++)

   for (j = i + 1; j < n; j++)
     threshold += *(pAk + j) * *(pAk + j);
 threshold = sqrt(threshold + threshold);
 threshold_norm = threshold * DBL_EPSILON;
 max = threshold + 1.0;
 while (threshold > threshold_norm)
{
   threshold = 10.0;
   if (max < threshold) continue;
   max = 0.0;
   for (pAk = A, k = 0; k < (n-1); pAk += n, k++)
      {
               for (pAm = pAk + n, m = k + 1; m < n; pAm += n, m++)
                  {
                       if ( fabs(*(pAk + m)) < threshold ) continue;
```

```
   cot_2phi = 0.5 * ( *(pAk + k) - *(pAm + m) ) / *(pAk + m);
  dum1 = sqrt( cot_2phi * cot_2phi + 1.0);
   if (cot_2phi < 0.0) dum1 = -dum1;
   tan_phi = -cot_2phi + dum1;
  tan2_phi = tan_phi * tan_phi;
  sin2_phi = tan2_phi / (1.0 + tan2_phi);
  cos2_phi = 1.0 - sin2_phi;
 sin_phi = sqrt(sin2_phi);
 if (tan_phi < 0.0) sin_phi = - sin_phi;
 cos_phi = sqrt(cos2_phi);
 sin_2phi = 2.0 * sin_phi * cos_phi;
 cos_2phi = cos2_phi - sin2_phi;

p_r = A;
dum1 = *(pAk + k);
dum2 = *(pAm + m);
dum3 = *(pAk + m);
*(pAk + k) = dum1 * cos2_phi + dum2 * sin2_phi + dum3 * sin_2phi;
*(pAm + m) = dum1 * sin2_phi + dum2 * cos2_phi - dum3 * sin_2phi;
*(pAk + m) = 0.0;
*(pAm + k) = 0.0;
for (i = 0; i < n; p_r += n; i++)
  {
  if ( (i == k) || (i == m) ) continue;
  if ( i < k ) dum1 = *(p_r + k); else dum1 = *(pAk + i);
  if ( i < m ) dum2 = *(p_r + m); else dum2 = *(pAm + i);
  dum3 = dum1 * cos_phi + dum2 * sin_phi;
  if ( i < k ) *(p_r + k) = dum3; else *(pAk + i) = dum3;
  dum3 = - dum1 * sin_phi + dum2 * cos_phi;
  if ( i < m ) *(p_r + m) = dum3; else *(pAm + i) = dum3;
 }
```

```
        for (p_e = eigenvectors, i = 0; i < n; p_e += n, i++)
              {
            dum1 = *(p_e + k);
            dum2 = *(p_e + m);
            *(p_e + k) = dum1 * cos_phi + dum2 * sin_phi;
            *(p_e + m) = - dum1 * sin_phi + dum2 * cos_phi;
             }
        }
        for (i = 0; i < n; i++)
          if ( i == k ) continue;
          else if ( max < fabs(*(pAk + i))) max = fabs(*(pAk + i));
     }
  }
  for (pAk = A, k = 0; k < n; pAk += n, k++)
eigenvalues[k] = *(pAk + k);
}

double** col(double** matrix,int row,int col)
{
int i,j,k=0;
double **column;
column=init(column,row,col);
for(i=0,j=(col-1);i<row;i++)
{
*(*(column+i)+k)=*(*(matrix+i)+j);
}
return column;
}

double** div(double** matrix, int row,int col, double Ch_sq)
{
int i,j,k=0;
double **divide;
```

```
divide=init(column, row, col);
for(i=0,j=(col-1);i<row;i++)
{
*(*(divide +i)+k)=*(*(matrix +i)+j) / Ch_sq;
}
return divide;
}

double** wpq(double** matrix, int row,int col)
{
int i,j,k=0;
double **wpq;
wpq=init(wpq, row, col);
for(i=0;i<row;i++)
{
*(*(wpq+i)+k)= *(*(matrix +i)+k);
}
return wpq;
}

double add(double** matrix, int row,int col)
{
int i,j=col-1;
double add=0.0;
for(i=0;i<row;i++)
add+= *(*(matrix +i)+j);
return add;
}

double** sub(double** matrix1,double** matrix2,int col)
{
int i,j;
double **difference;
```

```
minus=init(difference, col, col);
for(i=0;i<col; i++)
{
 for(j=0;j<col;j++)
 *(*(difference +i)+j)=( *(*(matrix1+i)+j) - *(*(matrix2+i)+j) );
}
return difference;
}
```

ANNEXURE III

Program for LCD Display

```
#include <unistd.h>
#include <string.h>
#include <stdio.h>
#include <io.h>
#include "system.h"
#include "alt_types.h"
#include "altera_avalon_timer_regs.h"
#include "altera_avalon_pio_regs.h"
#include "altera_avalon_lcd_16207_regs.h"
#define LCD_WR_COMMAND_REG 0
#define LCD_RD_STATUS_REG 1
#define LCD_WR_DATA_REG 2
#define LCD_RD_DATA_REG 3

void LCD_Init(void)
{
usleep(15000); /* Wait for more than 15 ms before init */
 /* Set function code four times -- 8-bit, 2 line, 5x7 mode */
 IOWR(LCD_BASE, LCD_WR_COMMAND_REG, 0x38);
 usleep(4100); /* Wait for more than 4.1 ms */
 IOWR(LCD_BASE, LCD_WR_COMMAND_REG, 0x38);
 usleep(100); /* Wait for more than 100 us */
 IOWR(LCD_BASE, LCD_WR_COMMAND_REG, 0x38);
 usleep(5000); /* Wait for more than 100 us */
 IOWR(LCD_BASE, LCD_WR_COMMAND_REG, 0x38);
```

```
usleep(100); /* Wait for more than 100 us */

/* Set Display to OFF*/
IOWR(LCD_BASE, LCD_WR_COMMAND_REG, 0x08);
usleep(100);

/* Set Display to ON */
IOWR(LCD_BASE, LCD_WR_COMMAND_REG, 0x0C);
usleep(100);

/* Set Entry Mode -- Cursor increment, display doesn't shift */
IOWR(LCD_BASE, LCD_WR_COMMAND_REG, 0x06);
usleep(100);

/* Set the Cursor to the home position */
IOWR(LCD_BASE, LCD_WR_COMMAND_REG, 0x02);
usleep(2000);

/* Display clear */
IOWR(LCD_BASE, LCD_WR_COMMAND_REG, 0x01);
usleep(2000);
}

int main()
{
        LCD_Init();
```

```
  FILE *fp;
  float prompt=0.0;
  char *Text1[16]= "UREA NORMAL";
  char *Text2[16]= "UREA BELOW NORMAL"
  char *Text3[16]= "UREA ABOVE NORMAL"

  fp=fopen("Estim_Urea.txt","r");

  if (fp == NULL)
  {printf("Error in opening of file \n");
  }
  else
  fscanf (fp, "%f", &prompt);

lcd_write_cmd(LCD_BASE,0x01);
usleep(5000);
  printf("%f",prompt);

  if ((prompt>112.5) && (prompt< 450))
 {
     int i;
        for(i=0;i<strlen(Text1);i++)
            {
                lcd_write_data(LCD_BASE,Text[i]);
         usleep(2000);
            }
 }
```

```
else if(prompt<112.5)
  {
   {
   int i;
        for(i=0;i<strlen(Text2);i++)
            {
                lcd_write_data(LCD_BASE,Text[i]);
         usleep(2000);
            }
}
else
   {
     int i;
        for(i=0;i<strlen(Text3);i++)
            {
                lcd_write_data(LCD_BASE,Text[i]);
         usleep(2000);
            }
    }
   fclose(fp);
   return 0;
}
```

1. “Solutions for Sustainable Agriculture and Food Systems”. Technical Report for the Post-2015 Development Agenda, Sept. 2013.
2. OECD contribution to the United Nations on sustainable agriculture, 2008.
3. Viacheslav I. Adamchuk. “Better Crops”. Vol. 94. No. 3, 2010.
4. “Geoinformatics for Precision Agriculture”. Rabi N. Sahoo, Lecture delivered in FAI Workshop on ‘Fertiliser Reform through ICT’. 14-17 June 2010 at Kufri Holiday Resort, Kufri, Shimla.
5. Subrata Kr. Mandal and Atanu Maity. “Precision Farming for Small Agricultural Farm:Indian Scenario”. American Journal of Experimental Agriculture, 3(1): 200-217, 2013.
6. D.V. Tran and N.V. Nguyen. “The concept and implementation of precision farming and rice integrated crop management systems for sustainable production in the twenty-first century”. http://www.fao.org/3/a-a0869t/a0869t04.pdf.
7. U.K. Shanwad, V.C. Patil And H. Honne Gowda. ”Precision Farming: Dreams and Realities for Indian Agriculture”. Map India 2004, Proceedings.
8. Subrata Kr. Mandal and Atanu Maity. “Indian Agriculture: Performance and Challenge, State of Indian Agriculture”, American Journal of Agriculture 3(1): 200-217, 2013.
9. http://www.agri.goa.gov.in/agriculture-in-goa
10. Sangeeta M. Sonak. “Khazan Ecosystems of Goa: Building on Indigenous Solutions to Cope with Global Environmental Change”, Springer Publications 2014.
11. www.agri.goa.gov.in.
12. http://icargoa.res.in/soilgoa/index.php
13. www.zuari.in
14. John W. Doran, “Soil health and global sustainability: translating science into practice”. Agriculture, Ecosystems and Environment 88 (2002) 119–127.
15. “Building Soils For Better Crops- Sustainable Soil Management”, Third Edition By Fred Magdoff And Harold Van Es Handbook Series Book 10
16. Peter Gruhn, Francesco Goletti, and Montague Yudelman. “Integrated Nutrient Management, Soil Fertility, and Sustainable Agriculture: Current Issues and

Future Challenges". Food, Agriculture, and the Environment Discussion Paper 32, Sept. 2000.

17. Buchleiter, G.W., Farahani H. 2002. "Comparison of electrical conductivity measurements from two different sensing technologies. Paper No. 02-1056, ASAE, St. Joseph, Michigan.
18. Fritz, R.M., Malo, D.D., Schumacher, T.E., Clay, D.E., Carlson, C.G., Ellsbury, M.M., Dalster, K.J., 1999. "Field comparison of two soil electrical conductivity measurement systems" In: Robert, P.C., Rust, R.H., Larson,W.E. (Eds.), Proceedings of the Fourth International Conference on Precision Agriculture. ASA-CSSA-SSSA, Madison, Wisconsin, pp. 1211–1217.
19. Sudduth, K.A., Kitchen, N.R., Bollero, G.A., Bullock, D.G.,Wiebold,W.J., 2003. "Comparison of electromagnetic induction and direct sensing of soil electrical conductivity". Agronomy Journal 95, 472–482.
20. Sudduth, K.A., Drummond, S.T., Kitchen, N.R., 2001. "Accuracy issues in electromagnetic induction sensing of soil electrical conductivity for precision agriculture". Computers and Electronics in Agriculture 31, 239–264.
21. Mueller, T.G., Hartsock, N.J., Stombaugh, T.S., Shearer, S.A., Cornelius, P.L., Barnhisel, R.I., 2003. "Soil electrical conductivity map variability in limestone soils overlain by loess". Agronomy Journal 96, 496–507.
22. Fan, G., Zhang, N., Sun, Y., Oard, D., 2001. "Simultaneous sensing of soil conductive and capacitive properties". Paper No. 01-1021, ASAE, St. Joseph, Michigan.
23. Lee, K.H., Zhang, N., Fan, G., Kluitenberg, G., Loughin, T., 2002. "Simultaneous Measurement of Soil Water Content and Salinity at Controlled Density and Depth". Paper No. 02-1095, ASAE, St. Joseph, Michigan.
24. Starr, J.L., Paltineanu, I.C., 2002. "Capacitance Devices". In: Dane, J.H.,Topp, G.C. (Eds.), Methods of Soil Analysis, Part 4, Physical Methods. SSSA, Madison, Wisconsin, pp. 463–474.
25. Whalley, W.R., Dean, T.J., Izzard, P., 1992. "Evaluation of the capacitance technique as a method for dynamically measuring soil water content". Journal of Agricultural Engineering Research 52, 147–155.

26. Lund, E.D., Colin, P.E., Christy, D., Drummond, P.E., “Applying soil electrical conductivity technology to precision agriculture”. In: Robert, P.C., Rust, R.H., Larson,W.E. (Eds.), Proceedings of the Fourth International Conference on Precision Agriculture. ASA-CSSA-SSSA, Madison, Wisconsin, pp. 1089–1100. 1999.
27. Colburn, J.W., Jr. “Soil Doctor multi-parameter, real-time soil sensor and concurrent input control system”. In:Robert, P.C., Rust, R.H., Larson,W.E. (Eds.), Proceedings of the Fourth International Conference on Precision Agriculture. ASA-CSSA-SSSA, Madison, Wisconsin, pp. 1011–1021. 1999.
28. Dabas, M., Tabbagh, A. “A comparison of EMI and DC methods used in soil mapping—theoretical considerations for precision agriculture”. In: Stafford, J.,Werner, A. (Eds.), Precision Agriculture.Wageningen Academic Publishers, Wageningen, The Netherlands, pp. 121–127. 2003.
29. Sudduth, K.A., Drummond, S.T., Kitchen, N.R. “Accuracy issues in electromagnetic induction sensing of soil electrical conductivity for precision agriculture”. Computers and Electronics in Agriculture 31, 239–264. 2001.
30. Lee, K.H., Zhang, N., Fan, G., Kluitenberg, G., Loughin, T. “Simultaneous Measurement of Soil Water Content and Salinity at Controlled Density and Depth”. Paper No. 02-1095, ASAE, St. Joseph, Michigan. 2002.
31. Andrade, P., Aguera, J., Upadhyaya, S.K., Jenkins, B.M., Rosa, U.A., Josiah, M. “Evaluation of a dielectric based moisture and salinity sensor for in-situ applications”. Paper No. 01-1010, ASAE, St. Joseph, Michigan. 2001a.
32. Shonk, J.L., Gaultney, L.D., Schulze, D.G., Van Scoyoc, G.E. “Spectroscopic sensing of soil organic matter content”. Transactions of the ASAE 34 (5), 1978–1984. 1991.
33. Shibusawa, S., Li, M.Z., Sakai, K., Sasao, A., Sato, H., Hirako, S., Otomo, A. “Spectrophotometer for Real-Time Underground Soil Sensing”. Paper No. 99-3030, ASAE, St. Joseph, Michigan. 1999.
34. Hummel, J.W., Sudduth, K.A., Hollinger, S.E. “Soil moisture and organic matter prediction of surface and subsurface soils using an NIR soil sensor”. Computers and Electronics in Agriculture 32 (2), 149–165. 2001.

35. Christy, C., Drummond, P., Laird, D. "An on-the-go spectral reflectance sensor for soil". Paper No. 03-1044, ASAE, St. Joseph, Michigan. 2003.
36. Ehsani, M.R., Upadhyaya, S.K., Slaughter, D., Protsailo, L.V., Fawcett, W.R. "Quantitative measurement of soil nitrate content using mid-infrared diffuse reflectance spectroscopy". Paper No. 00-1046, ASAE, St. Joseph, Michigan. 2000.
37. Whalley, W.R., Bull, C.R. "An assessment of microwave reflectance as a technique for estimating the volumetric water content of soil". Journal of Agricultural Engineering Research 50, 315–326. 1991.
38. Huisman, J.A., Hubbard, S.S., Redman, J.D., Annan, A.P., 2003. "Measuring soil water content with ground penetrating radar: a review". Vadose Zone Journal 2, 476–491.
39. Van Bergeijk, J., Goense, D. "Soil tillage resistance as tool to map soil type differences". In: Robert, P.C.,Rust, R.H., Larson, W.E. (Eds.), Proceedings of the Third International Conference on Precision Agriculture, ASA-CSSA-SSSA, Madison, Wisconsin, pp. 605–616. 1996.
40. Ehrhardt, J.P., Grisso, R.D., Kocher,M.F., Jasa, P.J., Schinstock, J.L. "Using the Veris electrical conductivity cart as a draft predictor". Paper No. 01-1012, ASAE, St. Joseph, Michigan. 2001.
41. Owen, G.T., Drummond, H., Cobb, L., Godwin, R.J. "An instrumentation system for deep tillage research". Transactions of the ASAE 30 (6), 1578–1582. 1987.
42. Alihamsyah, T., Humphries, E.G., Bowers Jr., C.G. "A technique for horizontal measurement of soil mechanical impedance". Transactions of the ASAE 33 (1), 73–77. 1990.
43. Andrade, P., Upadhyaya, S.K., Jenkins, B.M., Filho, A.G.S. "Evaluation of UC Davis compaction profile sensor". Paper No. 02-1185, ASAE, St. Joseph, Michigan. 2002.
44. Chung, S., Sudduth, K.A., Hummel, J.W., "On-the-go soil strength profile sensor using a load cell array". Paper No. 03-1071, ASAE, St. Joseph, Michigan. 2003.
45. Verschoore, R., Pieters, J.G., Seps, T., Spriet, Y., Vangeyte, J. "Development of a sensor for continuous soil resistance measurement". In: Stafford, J.,Werner, A.

(Eds.), Precision Agriculture.Wageningen Academic Publishers, Wageningen, The Netherlands, pp. 689–695. 2003.

46. Adamchuk, V.I., Skotnikov, A.V., Speichinger, J.D., Kocher, M.F. “Instrumentation system for variable depth tillage”. Paper No. 03-1078, ASAE, St. Joseph, Michigan. 2003.
47. Liu,W., Gaultney, L.D., Morgan, M.T. “Soil Texture Detection Using Acoustic Methods”. Paper No. 93-1015, ASAE, St. Joseph, Michigan. 1993.
48. Tekeste, M.Z., Grift, T.E., Raper, R.L. “Acoustic Compaction Layer Detection”. Paper No. 02-1089, ASAE, St. Joseph, Michigan. 2002.
49. Clement, B.R., Stombaugh, T.S. “Continuously-measuring soil compaction sensor development”. Paper No. 00-1041, ASAE, St. Joseph, Michigan. 2000.
50. Adamchuk, Viacheslav I.; Hummel, J. W.; Morgan, M. T.; and Upadhyaya, S. K., "On-the-go soil sensors for precision agriculture". Computers and Electronics in Agriculture 44, 71–91. 2004.
51. Adamchuk, V.I., Morgan, M.T., Ess, D.R. “An automated sampling system for measuring soil pH”. Transactions of the ASAE 42 (4), 885–891. 1999.
52. Adamchuk, V.I., Lund, E., Dobermann, A., Morgan, M.T. “On-the-go mapping of soil properties using ion-selective electrodes”. In: Stafford, J., Werner, A. (Eds.), Precision Agriculture. Wageningen Academic Publishers, Wageningen, The Netherlands, pp. 27-33. 2003.
53. Price, R.R., Hummel, J.W., Birrell, S.J., Ahmad, I.S. “Rapid nitrate analysis of soil cores using ISFETs”. Transactions of the ASAE 46 (3), 601–610. 2003.
54. Adsett, J.F., Thottan, J.A., Sibley, K.J., 1999. “Development of an automated on-the-go soil nitrate monitoring system”. Applied Engineering in Agriculture 15 (4), 351–356.
55. Birrell, S.J., Hummel, J.W., 2001. “Real-time multi-ISFET/FIA soil analysis system with automatic sample extraction”. Computers and Electronics in Agriculture 32 (1), 45–67.
56. A. P. Mallarino. “Field calibration for corn of the Mehlich-3 soil phosphorus test with colorimetric and inductively-coupled plasma emission spectroscopy determination methods”. Soil Sci. Soc. Am. J., 2003, 67, 1928–1934.

57. Pittman, J. J., H. Zhang, and J. L. Schroder. “Differences of phosphorus in Mehlich-3 extracts determined by colorimetric and spectroscopic methods”. Commun. Soil Sci. Plant Anal. 36:1641-1659. 2005.
58. M. E. Watson and R. A. Isaac. “ Analytical Instruments for Soil and Plant Analysis”. In Soil Testing and Plant Analysis, ed. R. L. Westerman, SSSA, Series number 3. Soil Science Society of America, Madison, WI, 1990, pp.691–740. 1990.
59. A. Mehlich, “ Mehlich 3 Soil Test Extractant: A modification of Mehlich 2 extractant”. Commun. Soil Sci. Plant Anal., 1984, 15, 1409–1416.
60. Dahnke W.C. “Use of the nitrate specific ion electrode in soil testing”. Soil Sci. and Plant Anal., 1971, 2(2): 73-84
61. Li, S. and K.A. Smith. “The rapid determination of nitrate concentrations at low concentrations in soil extracts: comparison of ion selective electrodes with continuous flow analysis”. Comm. Soil Sci. and Plant Anal. 15(12):1437-1451. 1984.
62. Adsett, J.F. and G.C. Zoerb. 1991. “Automated field monitoring of soil nitrate levels”. In Automated agriculture for the 21st century. ASAE Publ. 11-91. St. Joseph, MI: 326-335.
63. Adsett, J.F., J. A. Thottan and K. J. Sibley. “Development of an automatic on-the-go soil nitrate monitoring system”. Applied Engineering in Agriculture 15(4):351-356. 1999.
64. Adamchuk, V. I., M. T. Morgan and D. R. Ess. 1999. “An automated sampling system for measuring soil pH”. Trans. ASAE 42(4):885-891.
65. Collins, K., Christy, C., Lund, E., Drummond, P. “Developing an automated soil pH mapping system”. Paper No. MC03-205, ASAE, St. Joseph,Michigan. 2003.
66. Adamchuk, V.I., Lund, E., Dobermann, A., Morgan, M.T. “On-the-go mapping of soil properties using ion-selective electrodes”. In: Stafford, J., Werner, A. (Eds.), Precision Agriculture. Wageningen Academic Publishers, Wageningen, The Netherlands, 2003. pp. 27–33.

67. Kim H.J., Hummel J.W., Sudduth K.A., Motavalli P.P. “Simultaneous Analysis of Soil Macronutrients Using Ion-Selective Electrodes”. 2007. SSAJ, 71(6): 1867-1877.
68. Kim H.J., Sudduth K.A., Hummel J.W. “Soil macronutrient sensing for precision agriculture”. Journal of Environment Monitoring, 11, 2009. 1810-1824.
69. Birrell, S.J., & J.W. Hummell. “Multi-sensor ISFET system for soil analysis”. In: J.V. Stafford (ed.) Precision Agriculture ’97. Proc. Eur. Conf. on Prec. Agric., 1st. Warwick Univ. Conf. Cent., UK. 7–10 Sept. 1997. BIOS Sci. Pub. Ltd., Oxford, UK. 1997. p. 459–468.
70. Birrell, S.J., & J.W. Hummell. “Membrane selection and ISFET configuration evaluation for soil nitrate sensing”. Trans. ASAE 43(2):197–206. 2000.
71. Birrell, S.J. and J.W. Hummell. “Real-time Multi-ISFET/FIA Soil Analysis System with Automatic Sample Extraction”. Computers and Electronics in Agriculture: 32(1):45–67. 2001.
72. Price R.R., J.W. Hummel, S.J. Birrell, & I.S. Ahmad. “Rapid nitrate analysis of soil cores using ISFETs”. Trans. ASAE 46(3):601–610. 2003.
73. Adamchuk, V. I., E. D. Lund, B. Sethuramasamyraja, M. T. Morgan, A. Dobermann and D. B. Marx. 2005. “Direct measurement of soil chemical properties on-the-go using ion-selective electrodes”. Computers and Electronics in Agriculture. 48: 272-294.
74. S. K. Upadhyaya, S. Shafii and D. Slaughter, ASAE Meeting Paper94-1055, ASAE, St. Joseph, MI, 1994.
75. R. C. Dalal and R. J. Henry, “Simultaneous determination of moisture, organic carbon, and total nitrogen by near infrared reflectance spectrophotometry,” Soil Sci. Soc. Am. J., vol. 50, pp. 120-123, 1986.
76. C. W. Chang, D. A. Laird, M. J. Mausbach and C. R. Hurburgh. “Near Infra red Spectroscopy- principal components regression analysis of soil properties”. Soil Sci. Soc. Am. J., 2001, 65, 480–490.
77. Dunn, B.W., Beecher, H.G., Batten, G.D. and Ciavarella, S. (2002). “The potential of near-infrared reflectance spectroscopy for soil analysis — a case

study from the Riverine Plain of south-eastern Australia". Australian Journal of Experimental Agriculture 42: 607–614.

78. Shibusawa, S., I Made Anom, S.W., Sato, S., Sasao, A. and Hirako, S. (2001). "Soil mapping using the real-time soil spectrophotometer". In ECPA 2001: 3rd European Conference on Precision Agriculture. (S. Blackmore and G. Grenier, eds). Ecole Nationale Superieure Agronomique de Montpellier, France.
79. Shibusawa, S., I Made Anom, S.W., Hache, C., Sasao, A. and Hirako, S. (2003). "Site-specific crop response to temporal trend of soil variability by the real-time spectrophotometer". In Precision Agriculture: Proceedings of the 4th European Conference on Precision Agriculture. (J. Stafford and A. Werner, eds). Wageningen Academic Publishers: Wageningen.
80. Reusch, S., Link, A. and Lammel, J. (2002). "Tractor-mounted multispectral scanner for remote field investigation". In Proceedings of the Sixth International Conference on Precision Agriculture. (P.C. Robert, ed.). ASA-CSSA-SSSA: Madison.
81. Solie, J.B., Stone, M.L., Raun, W.R., Johnson, G.V., Freeman, K., Mullen, R., Needham, D.E., Reed, S. and Washmon, C.N. (2002). "Real-time sensing and N fertilization with a field scale GreenSeeker™ Applicator". In Proceedings of the Sixth International Conference on Precision Agriculture. (P.C. Robert, ed.). ASA-CSSA-SSSA: Madison.
82. Linker R., A. Kenny, A. Shaviv, L. Singher and I. Shmulevich (2004). "FTIR/ATR nitrate determination of soil pastes using PCR, PLS and cross-correlation". Applied Spectroscopy, 58(5):516-520.
83. B. R. Jahn, P. A. Brooksby and S. K. Upadhyaya. "Wavelet-based spectral analysis for soil nitrate content measurement". Trans. ASAE,2005, 48, 2065–2071.
84. Ingleby, H.R. and Crowe, T.G. 2000. "Reflectance models for predicting organic carbon in Saskatchewan soils". Can. Agric. Eng. 42:057-063.
85. Bogrekci I., Lee W.S. 2005. "Spectral Soil Signatures and sensing Phosphorus". Biosystems Engineering (2005) 92 (4), 527–53.

86. Viscarra Rossel, R. A., McGlynn, R. N., and McBratney, A. B. (2006). “Determining the composition of mineral-organic mixes using UV–vis–NIR diffuse reflectance spectroscopy”. Geoderma 137, 70–82.
87. Waiser, T. H., Morgan, C. L. S., Brown, D. J., and Hallmark, C. T. (2007). “In situ characterization of soil clay content with visible near-infrared diffuse reflectance spectroscopy”. Soil Sci. Soc. Am. J. 71, 389–396.
88. Viscarra Rossel, R., Cattle, S., Ortega, A., and Fouad, Y. (2009). “In situ measurements of soil colour, mineral composition and clay content by vis-NIR spectroscopy”. Geoderma 150, 253–266.
89. Kusumo, B. H., Hedley, M. J., Hedley, C. B., and Tuohy, M. P. (2011). “Measuring carbon dynamics in field soils using soil spectral reflectance: Prediction of maize root density, soil organic carbon, and nitrogen content”. Plant Soil 338, 233–245.
90. Zhen X., Changjun S., Hua Y., Shirui Z. 2014. “Research and Design of Soil Water Content Sensor based on HF capacitive”. Sensors & Transducers, Vol.26, pp. 56-60.
91. Jackels Marisa. “Biodegradable soil sensor in design by c2sensor”. Reported in Emerging Praire, March 9, 2015.
92. Chaudhari P.R., Ahire D.V. 2014. “Variation of Dielectric Constant of Indian Soils With their Physical Parametersat C band Microwwave Frequency”. International Journal of Innovation Research in Science, Engineering and Technology. Vol.3 (8), pp. 15396-15400.
93. www.soilsensor.com/soilsensors.aspx
94. Schirrmann, M. and H. Domsch, 2011. “Sampling procedure simulating on-the-go sensing for soil nutrients”. J. Plant Nutr. Soil Sci., 174: 333-343. DOI: 10.1002/jpln.200900367.
95. Sabine Chabrillat, Eyal Ben-Dor, Raphael A. Viscarra Rossel, and José A. M. Demattê 2013. “Quantitative Soil Spectroscopy”. Applied and Environmental Soil Science Volume 2013 (2013), Article ID 616578, 3 pages http://dx.doi.org/10.1155/2013/616578.

96. Agilent-Basics of Measuring the Dielectric Properties of Materials, Application Note.
97. www.rf-mw.org
98. Multivariate Data Analysis for Dummies. Camo software special edition.
99. www.jncasr.ac.in/chronobiology/reading-material/multivariatebasics_mewasingh.pdf
100. www.camo.com/downloads/products/white-paper_MVA.pdf.
101. Saed-Moucheshi A., Fasihfar E., Hasheminasab H., Rahmani A., Ahmadi A. "A Review on Applied Multivariate Statistical Techniques in Agriculture and Plant Science". International journal of Agronomy and Plant Production. Vol., 4 (1), 127-141, 2013.
102. Maitra S., Yan J. " Principal Component Analysis and Partial Least squares: two Dimension reduction Technique for Regression". Casualty Actuarial Society Discussion Program. 2008.
103. Vander Werf M.J., Renger J. "Multivariate Data Analysis: Converting data into information". TNO.1-7. 2007.
104. www.statsoft.com/textbook/Cluster-Analysis
105. www. Wikipedia.org/ wiki/DiscriminantFunctionAnalysis
106. www.camo.com/resoources/pls-regression.html
107. Geladi, P, and Kowalski, B. (1986), ''Partial least squares regression: A tutorial,'' Analytica Chimica Acta, 185, 1-17.
108. Wold S., Sjostrom M., Eriksson L. (2001), "PLS-regression: a basic tool of chemometrics". Chemometrics and Intelligent Laboratory Systems 58,109–130.
109. http://www.eigenvector.com/Docs/Wise_pls_properties.pdf
110. de Jong, S. "SIMPLS: An alternative approach to partial least squares regression". Chemometrics and Intelligent Laboratory Systems, 1993, Vol. 18, pp. 251-263.
111. Viscarra Rossel R. A. " ParLeS: software for chemometrics analysis of spectroscopic data." Chemometrics and Intelligent Laboratory Systems 90 (2008) 72–83.
112. http://www.hunteng.co.uk/info/fpga-or-dsp.htm

113. http://sine.ni.com/cms/images/devzone/tut/swvvifhq55851.jpg
114. http://sine.ni.com/np/app/main/p/ap/imc/lang/en/pg/1/sn/n17:imc,n19:FPGA_target/fmid/2170
115. Altera, White paper. FPGAs provide reconfigurable DSP solutions. August 2002.
116. http://www.fpgarelated.com/showarticle/21.php
117. Calderón H., Elena C., Vassiliadis S. "Soft Core Processors and Embedded Processing: a survey and analysis". www.citeseerx.ist.psu.edu/viewdoc/download?doi=10.1.1.101.3336
118. Borisov P., Kukenska S.V. "Implementation Of Soft-Core Processors In FPGAs". International Scientific Conference. 23 – 24 November 2007.
119. Sven-Ake Andersson. "Examine soft-core processors for embedded systems". EE Times-Asia, eetasia.com.2013. pp1-5.
120. Tong J., Anderson I.D., Khalid M. "Soft-Core Processors for Embedded Systems". 18th International Conference on Microelectronics, 2006.
121. Altera, "Cyclone vs. Spartan-3 Performance Analysis". White paper. April 2004, ver 1.0.
122. Parab J.S., Gad R. S., Naik G.M. "Implementation of DSP algorithms on reconfigurable embedded platform". 2009. Journal of Electrical and Electronics Engineering Research Vol. 1(1) pp. 023-029.
123. Altera DE2 user manual.
124. www.altera.com/en_US/pdfs/literature/ug/ug_sopc_builder.pdf