ANALYSIS OF SERVICE QUALITY GAPS AND CUSTOMER SATISFACTION ON CUSTOMER LOYALTY AND FINANCIAL PERFORMANCE OF PUBLIC, PRIVATE AND MULTI STATE CO-OPERATIVE BANKS IN INDIA

Thesis submitted to

Goa University

For the award of the Degree of

DOCTOR OF PHILOSOPHY

IN

COMMERCE

BY

Shri. ASHISH MANOHAR JOSHI

Associate professor

Dept of commerce

MES College of Arts & Commerce

Under the guidance of

Dr. K. G. SANKARANARAYANAN

Associate Professor and Director,

Zantye College Research centre

Narayan Zantye College of Commerce

Bicholim-Goa

2019

Dedicated

To my beloved father

Late Shri. Manohar Damodar Joshi

DECLARATION

I, *Ashish M Joshi*, do hereby declare that this dissertation entitled "Analysis of Service Quality Gaps and Customer Satisfaction on Customer Loyalty and Financial Performance of Public, Private and Multi State Co-Operative Banks in India" is a record of original research work done by me under the supervision of Dr. K G Sankaranarayanan, Associate Professor and Director of Research Centre at Narayan Zantye College of Commerce, affiliated to Goa University.

I also declare that this dissertation or any part thereof has not been previously submitted by me for the award of any Degree, Diploma, Title or Recognition in Goa University or elsewhere. The textual content put up in inverted commas in this report is the verbatim reproduction of the same from its original sources as they form the unavoidable part of this report.

(Ashish M Joshi)
Research student

Place: Goa University

Date: 30/06/2020

CERTIFICATE

This is to certify that the Ph.D. thesis titled "Analysis of Service Quality Gaps and Customer Satisfaction on Customer Loyalty and Financial Performance of Public, Private and Multi State Co-Operative Banks in India" is a record of original research work carried out by Shri.Ashish Manohar Joshi under my guidance at the Goa Business School, Goa University.

This dissertation or any part thereof has not previously formed the basis for the award of any Degree, Diploma, Fellowship or any other similar titles in Goa University or elsewhere.

Dr. K. G. Sankaranarayanan
Research Guide

Place: Goa University
Date: 30/06/2020

ACNOWLEDGEMENT

I am deeply indebted to **Dr. K.G Sankaranarayanan,** Associate Professor and Research Guide, Research Centre, Narayan Zantye College of Commerce, Bicholim Goa, for his inspiring guidance, valuable suggestions and constant encouragement, without his immense help and proper guidance I wouldn't be able to successfully complete this intellectual pursuit.

My sincere thanks are due to **Dr.R.B.Patil,** Principal, MES College Arts & Commerce, Zuarinagar-Goa for his encouragement and support to complete my research work.

It is my bounden duty to acknowledge my debt to **Dr.Kailas Gokhale** for his help to involve myself in this intellectual analysis of data.

I am extremely thankful to **Dr.K.B.Subhash,** Dean & Head of the Department of Commerce, Goa University, for his encouragement, suggestions and assistance.

I sincerely thank **Dr. Nandkumar Mekoth** for giving his valuable suggestion and also **Dr. Anjana Raju** Ex Head of Department & **Dr. Y. V. Reddy** Ex Dean and the Registrar of Goa University for providing their valuable inputs.

I am also thankful to my subject expert **Dr.Pritha Malya**, Principal, Shree Damodar college of Economics, Margao Goa.

I indeed find no words to express my sincere and heartfelt thanks to my colleague **Shri.Veeraj Mahatme**, Department of Business Administration(BBA), MES College of arts & Commerce, Zuarinagar Goa and **Mrs. Meera Mayekar** of GVM'S GGPR College of commerce and Economics for their scholarly comments and timely help to complete my research work.

I m also thankful to **Dr. Gopa Kumar** Librarian of Goa University and to my friend **Dr. Harip Khanapuri** of SS Dempo College of Commerce and Economics, Bambolim Goa, for extending their valuable help and support in successful completion of my research work. I would also like to place on record, my sincere thanks to my friend **Shri. Avinash Pereira** for extending his help in my research work.

I owe my sincere thanks to **Dr.Dhananjay Pingale** (Pune) and my friend **Shri. Ashwin Anadani** (Gujarat) who helped me in gathering data from respondents.

I sincerely acknowledge the courtesy and help of the Librarians of Narayan Zantye College of commerce and the librarian of MES College Arts and commerce Zuarinagar Goa, for providing me necessary reference material for my research work.

I sincerely thank the director, department of higher education (DHE) **Shri.Prasad Loylienkar**, Govt of Goa for granting me six months leave for completion of my research work.

I am equally thankful to all the customers pertaining to public, private and multi-state cooperative banks who extended their whole hearted support and co-operation for successful completion of primary data collection for my research work.

I extent my sincere thanks to the office staff of MES college, Zuarinagar Goa and the office staff of Narayan Zantye College of commerce for extending their whole hearted support and cooperation.

I owe my sincere thanks to all research colleagues of the research centre, Narayan Zantye College of Commerce, who continuously encouraged me and helped in my research work.

I am grateful to my beloved wife **Mrs**. **Shalaka A Joshi,** my loving daughter **Miss. Astha A Joshi** and my son **Mast. Avaneesh A Joshi** and my mother, brother, for the love, care and unstinted support that have helped me to complete my research work successfully.

(Ashish M Joshi)

ANALYSIS OF SERVICE QUALITY GAPS AND CUSTOMER SATISFACTION ON CUSTOMER LOYALTY AND FINANCIAL PERFORMANCE OF PUBLIC, PRIVATE AND MULTI STATE CO-OPERATIVE BANKS IN INDIA

By: Ashish Manohar Joshi

Research Guide: Dr. K. G. Sankaranarayanan

Associate Professor and Director

Zantye College Research Centre

ABSTRACT

Providing high-quality customer service is of paramount importance for organizations operating in the service sector. A firm offering quality services have the ability to hang on to its customers and consistently deliver value. An organization cannot achieve success without regard to the customers' demands and satisfaction. Ensuring superior service quality will enable companies to be distinct from their competitors, obtain a sustainable competitive advantage, and improve their functioning.

The primary objective of the research study is to explore the opinion of the customers of public, private and multi-state cooperative banks in relation to services offered, expectation and perception level of the customers towards service quality and to identify service quality gaps. In addition to the above objective, the study also aimed at to evaluate the relationship between dimensions of service quality with satisfaction level of the customers and customer loyalty pertaining to public, private and multi-state cooperative banks and identify the most important dimensions of service quality and also to analyze the effect of demographic variables on the satisfaction level of the customers of public, private and multi-state cooperative banks and finally to examine the relationship between service quality with the financial performance of public, private and multi-state cooperative banks vis-à-vis customer satisfaction and customer loyalty. In order to have a thorough understanding of the influence of service quality on customer satisfaction, customer loyalty and financial performance of the banks, both qualitative and quantitative research approach were applied.

The survey method was used to collect data from the bank customers, which formed a part of the qualitative study undertaken. One way Annova, Exploratory factor analysis, confirmatory factor analysis, Correlation analysis, multiple regression analysis and structural equation modeling were performed to analyze the data. For exploratory factor analysis sample data of 596 respondents have been used, whereas the confirmatory factor analysis was conducted on the data obtained from a completely different set of 533 respondents. For structural equation modeling, data of all 1129 responses were used. The secondary data for the study were extracted from the published financial statements of banks, a total of 15 banks were studied (5 banks each operating in public, private and multistate cooperative sector) and financial data for a period of 10 years (2007-08 to 2016-17) was analyzed.

The results of the study indicate that the customers of public, private and cooperative sector banks have low perception on all seven dimensions of service quality, whereas their expectations are very high, resulting in a service gap on all dimensions of service quality. Further it is observed that all the dimensions of service quality have a significant relationship with customer satisfaction, it is also evident that service quality dimensions have a direct and positive relationship with customer loyalty. The study clearly indicates that there is statistically a significant relationship between service quality with the satisfaction of customers and also the loyalty of the customers. Finally it is also observed that the relationship between service quality and financial performance is found to be statistically significant and there is a significant relationship between customer loyalty and financial performance of banks.

The exploratory analysis of this study revealed seven distinct dimensions of service quality, which are bank infrastructure, employee trust, employee commitment, employee assurance, employee empathy, modern services and transaction security. The outcome of the study has resulted in the formulation of conceptual logic service quality chain model. The study has proved that providing quality services to customer leads to high satisfaction levels, which further helps the banks in having loyal customers and in turn leads to better financial performance.

Thus to conclude the study provides a methodology to the bankers to know and design their products and services in such a way that will attract more customers. Thus the bank management has to adopt a multi-level approach to strategically plan and train their employees to evaluate the perception of their customers pertaining to services offered and have a win-win situation to all stakeholders.

Ashish M Joshi

Table of contents

List of Tables

List of Figure

Chapter One
Introduction

The main aim of this chapter is to introduce the topic, further in this chapter we are discussing the background of the study, history of the Indian banking sector, phases of evolution of the Indian banking sector , current development in the banking industry, the importance of service quality in banks, statement of the problem and the organisation of chapters.

1.1 Background

One of the key areas in a given economy which has received enormous attention in the recent times is the financial sector. Within this broad ambit, it is the banking sector which has contributed significantly towards the growth and development of various sectors of the economy. During the past decade due to the changes made in the regulatory, structural and technological factors have lead to drastic changes in the overall banking environment across the world (Angur et al., 1999). Given the above facts, academician, researchers and policymakers are researching this area to know and understand the various factors that contribute towards financial stability of the banks worldwide. In the present times it is been argued, that the financial health of institutions is considered to be a prerequisite for rapid industrial growth and development of the nation.

The economy basically consists of three main sectors, viz. Primary sector, Secondary sector and the Tertiary sector. Historically it is the manufacturing sector that contributed to the international trade, thus resulting in competition among the growing economies, the outcome resulted in shrinkage of manufacturing sector, which in turn lead to the growth of the service sector. This sector basically involves the provision of services to the individuals and business community at large. The focus of the service providers is to interact with their clients, design products and services as per their requirements and serve them better. The services sector plays a constructive role in the development of the country. Studies in the past have clearly indicated that, the employment elasticity in the services sector is the highest as compared to the agriculture and the manufacturing sectors, thus the growth of the services sector not only helps in employment generation but also helps in increasing the GDP of the country and provide complementary services

to industrial units and the agricultural sector. The service sector, acts as a catalyst in the growth and development of the economy (Pattnaik and Chhatoi, 2006). Further the availability of good quality service is considered to be vital, for the well being of the economy in general and to the individuals in particular. Thus, today in the most advanced nations of the world the growth of the primary and secondary sector is totally dependent on the growth of service sector in their country which includes banking, insurance, trade, commerce, entertainment etc. The U.S. and other developed economies are dominating the world due to growth and development in the services sector, accounting for more than two-thirds of its gross domestic product (GDP). Thus the services sector today is the backbone of social and economic development of the nation and has emerged as the fastest growing sector across the globe.

Keeping in line with this global phenomenon, the service sector in India has witnessed a major boom and is contributing towards national income besides employment in the country. In fact during the past few decades, the services sector in India has assumed an important position contributing to over 60% to the country's GDP and has further witnessed a major shift from manufacturing based economy, to a service oriented economy, due to certain important developments in the physical infrastructure and developments in the telecommunication systems. Factors like increased life expectancy, more leisure time, higher per capita income, increased young population, female work force participation, changing socio cultural values, etc, have also played a significant role in the growth of the service sector in India. However it is the technological aspect that has totally revolutionized the services sector at the global level and also in India. Thus it is expected that the service sector in India would continue to be the engine of growth and the backbone of the economy to meet global competition and also to satisfy the growing domestic demands.

As India moves towards a service based economy, marketers need to know more about marketing their services. In the given scenario the key for survival in the global market for service organizations, is to offer services that are superior to their competitors. Thus, in the recent years the thrust is on delivering efficient customer service. Consequently the implementation of liberalization, privatization and globalization (LPG) by the government has given enough choice to consumers and has become more aware of their requirements in relation to services; hence the Indian consumer today on account of

better awareness and availability of alternatives is demanding quality service at an affordable price. In recent years the expectations and perceptions of the customer is changing, making it difficult for the service provider to measure and manage the services effectively. Infact the survival of the service sector largely depends on the firm's understanding of customers needs and problems of services rendered. Thus service organizations must be in a position to manage their clients, their expectations should be properly understood and measured from the customers' perspective and gaps in services rendered should be identified to improve in future.

The provision of high quality customer service is of fundamental and paramount importance for organizations operating in the service sector. A firm offering quality services has the ability to hang on to its customers and consistently deliver value to them (Kotler and Amstrong, 1996). An organization cannot achieve success without regard to the customers, demands and their satisfaction. Ensuring superior service quality will enable companies to distinct them from their competitors, obtain sustainable competitive advantage, and improve their functioning (Davoudian, 2010). Further it was observed that around 70% of organizations did not understand how service quality creates value in the mind of the customers, on account of this lack of understanding, organizations failed to develop good service quality strategies to get maximum benefit. Such high failure has provoked researchers to understand the causes of the problem (Wang, Lo and Hui 2003). Thus considering the relevance of service quality, researchers and academicians have devoted their attention to service quality.

Banks are considered to be an important constituent of the financial system of the country, as it plays a constructive role in the process of nation building. In fact, the banking system is recognised as the lifeblood of an economy, thus an efficient banking system shall help to promote investments, which will help to foster economic growth. In the present era of competition with the increase in the number of banks, concentration has to be on effective marketing of their product and services. Thu banks need to understand the changing requirements of the customer and adapt to the latest service quality systems, to compete more effectively with the global organizations (Lau, Cheung, Lam & Chu, 2013). The banks while designing their products/services should look into the needs and expectations of the customers and understand what aspect of service quality shall attract them to buy, delight them through services and leave a

lasting impression by providing excellent services. Providing superior service quality will help to increase the satisfaction level of customers which will indirectly result in better business on account of customers being loyal to the organization. Thus, it is important to study the impact of service quality on the performance of the banks operating in various sectors. Several studies have been undertaken by researchers across the globe to judge the impact of service quality on the financial performance of the banks. With increase in the competition among the banks, service quality, is recognised to be an important measure of banks performance and continues to attract the attention of banking companies and remaining at the forefront of the services marketing literature (Lasser et al., 2000; Yavas and Yasin, 2001). Service quality has become an important research topic on account of its apparent relationship with costs (Crosby, 1979), profitability (Buzzell and Gale, 1987; Rust and Zahorik, 1993; Zahorik and Rust, 1992), customer satisfaction (Boulding et al., 1993), customer loyalty (Reichheld and Sasser, 1990), and positive word of mouth by the customers.

In the recent years the evaluation of service quality has become a major thrust area of research in the services sector. It has attracted attention of practitioners, managers and researchers, owing its strong impact on the financial performance of business, lowering the expenses, satisfaction of the customers, loyalty as well as their income (Cronin and Taylor, 1992; Chang and Chen, 1998; Lasser et al., 2000; Newman, 1996; Sureshchander et al., 2002). Therefore, this topic of service quality is increasingly being considered as one of the key strategic values, particularly for institutions operating in the service sectors, hence providing superior service quality is considered to be a prerequisite of a firm's success in business today (Lai et al., 2007).

Against this background, a need was felt to take a research study to analyze efforts taken by banks in providing services to their customers and also understand satisfaction level of customers. Such an effort shall help the bankers to identify the service quality gaps, which will help in attracting, acquiring, satisfying and retaining the customers. The shortcomings shall enable the bankers to design appropriate strategy in designing their products and services. The study will also help the bankers, to relook into their services, based upon the need of the hour. Further, based on the study, necessary suggestions will be given, which will help in bridging the gap that exists between customers in terms of their expectations and perceptions regarding various services

provided by the banks. Thus the study makes an attempt to identify service quality gaps across various sectors of banks in India and judge its impact on satisfaction levels of the customers and whether superior service quality lead to customer loyalty. It will also enable us to find out cause and effect relationship between service quality outcomes with the financial performance of the banks operating in various sectors.

1.2 History of the Indian Banking Industry

The banking system in India started a few decades back which helped to completely revolutionize the economy. Earlier people got their requirements from goldsmith and sawkars, who took the responsibility of safely keeping their belongings and lending loans. This was the earliest glimpse of banking system in India. Subsequently a complete change was witnessed in the banks all over the country.

In India, the first bank named The General Bank of India came into existence in 1786, later a series of banks were established like the (Bank of Bengal/Calcutta in 1809) by the East India Company, followed by Bank of Bombay in 1840 and Bank of Madras in 1843. These three individual units were initially named as Presidency Banks. Later Allahabad bank was established in the year1865 which was completely operated by Indians. The Punjab National bank Ltd. was set up in the year 1894 having its headquarters at Lahore. During the period 1906 and 1913 banks such as Bank of India, Central Bank of India, Bank of Baroda, Canara Bank, Indian Bank, and Bank of Mysore became operational. Finally in 1921, all the presidency banks amalgamated into 22 types of Imperial Bank of India which were operated by European Shareholders and after series of developments, the Reserve Bank of India became operational from 1935.

1.3 Phases of Evolution of Indian Banking Industry

The evolution of the banking industry in India has spread over two centuries; the industry has witnessed major developments in the area of product development, innovative services and upgraded technology, various regulations to govern it and the ownership structure of the banks in India. Further it was observed that due to the entry of foreign banks and new private sector banks in the Indian economy, major changes were witnessed in the operations and workings of the bank established in India.

Thus the entire evolution of the Indian banking industry can be classified into four distinct phases which are as follows:

Phase I- Pre-Nationalisation Phase (prior to 1955)

The first phase was the pre Nationalisation phase, in this phase it was observed that the growth of the banking sector was very slow in India between 1913 and 1948, whereby approximately 1100 small banks were established. Further with a motive to streamline the functioning and activities of these commercial banks, the Government of India passed the Banking Companies Act, in 1949 which was later changed to Banking Regulation Act 1949 by amending the act of 1965, under this the RBI was vested extensive powers to supervise and guide the banks in India as the Central Banking Authority and look into day to day operations of the banks.

Phase II- Era of Nationalisation and Consolidation (1955-1990)

The second phase was the era of Nationalisation and consolidation, in this phase the Government of India after independence introduced banking sector reforms, firstly in 1955, the Imperial Bank of India was nationalized and it was renamed as State Bank of India (SBI), which was then the principal agent of RBI. Later in 1960 seven banks in India were nationalized which were subsidiary of State Bank of India. On 19th July, 1969, 14 major commercial banks of the country were nationalized followed by nationalization of another six banks in the year 1980, thus the number of nationalized banks in India increased to 20. By the year 1980 almost 80% of the banks were under government of India ownership. In the year 1993 based on the suggestions of Narsimhan Committee, the Banking Regulation Act was amended, leading to the opening of doors to foreign banks and new private sector banks in India.

Phase III- The introduction of Indian Banking & Financial Sector Reforms and Partial Liberalisation (1990-2004)

The third phase was the phase of financial sector reforms and partial liberalisation in the Indian banking sector, where in 1990's the banking industry witnessed, major changes in the form of reforms taken by the government, which included the policy document on liberalization and privatisation, where a small number of private banks were licensed for doing banking business in India. These were known as new generation private

techno savvy banks like Oriental Bank of Commerce, Axis Bank, ICICI Bank and HDFC Bank. This move gave a boost to the rapid growth in the economy of India and also revolutionized the banking sector. Thus there had been rapid growth and contribution to the economy by all the three sectors of banks, namely, government banks, private banks and also the foreign banks.

Phase IV- Period of Increased Liberalisation (2004 onwards)

The fourth phase was the period of increased liberalisation, where the major thrust was the promotion of foreign direct investment (FDI) ceilings in the banking sector to be increased from current level of 49% to 74%. Thus was a roadmap set for the inclusion of foreign banks. There was a liberal branch policy formulated and implemented. As per the report of the planning commission in 2009, various committees were formed, which gave recommendations pertaining to structural changes in the Indian banking system, like setting up of small banks to cater people's needs very easily, permission to more foreign and private banks to foster and have healthy competition which will benefit the customers and focusing on the corporate governance guidelines for the smooth running of the banks. The various committees formed that proposed structural changes were the Narasimhan committee formed in 1991 on financial sector reforms, the Banking Sector Reforms committee under the Chairmanship of Shri M. Narasimhan in 1998 and the committee on the financial sector reforms under the guidance of Shri Raghuram G. Rajan in 2009. The main purpose behind forming of these committees was to decide a roadmap for the banks operating in India and enable them to deal with the issues related to the structure of the banking system.

1.4 Current developments in the Banking industry

The financial sectoral reforms in India which took place in the year 1991 witnessed major changes in the banking industry, the entry of new private banks and foreign banks lead to a severe competition in the existing markets, thus witnessing a move from a highly regulated environment to a deregulated economy.

The recent developments in the banking sector on account of liberalization, privatization and globalization have resulted in some major developments in the functions and role of banks. Such transformation has been more significant due to the technology platform which is acting as a catalyst for development in the banks. The banking system in India

has well adjusted with the rapidly changing markets, have faced challenges in terms of competition, price and changing preferences of the customers, finally as per the agreement with WTO of opening up of international competition banks today have to gear up to meet and satisfy increasing tastes and preferences of customers and competition from rival banks having better products and services.

The Indian banking industry today is considered to be the largest in South Asia, having unique ownership groups of banks operating as public, private, foreign and the cooperative sector. The RBI in 1992, based on the recommendation of the Narsimhan Committee Report on financial sector reforms, launched major banking reforms to ensure that banks are profitable, efficient, viable and healthy in India. Thus the banking industry has witnessed sizable changes and developments but ironically never failed to meet the increasing demands of the country. For businesses operating in the banking sector the satisfaction of the customers is of prime importance due to increased competition. Thus taking into account the above listed developments in the banking industry in India it's time for the banks to relook, renovate and reconstruct so that they are able to adhere to the increasing expectations and aspirations of the customers of the nation.

The government of India is taking efforts to improve the banking system for its effective utilization and growth. The nationalization of banks helped in streamlining the working of the banks towards public welfare and improved the banking industry, thus in turn helping the economy to grow in a sustainable manner. The policy of the government of India on globalization enabled foreign banks to enter Indian market and flourish with new products and services, with their main focus on technology. This forced Indian banks to modernize its services with ICT to serve the customers in a better way. Based on the recommendations of the Rangarajan Committee in 1989, the banks undertook the implementation of ICT for improving the quality of services and efficiency. This move by the banks revolutionized the banking industry by offering cost effective products and efficient services to their customers. Considering this aspect banks today have to meet the customers' expectations and also strive hard to implement innovative service delivery for their survival and sustainance. Banks today are investing heavily in automation and computerization of branches with a purpose to retain present customers and attract new customers. Banks have also initiated a few innovations in its

day today services with a view to facilitate its customers in a better way; these services include automated teller machine (ATM), Mobile banking, Internet Banking, Core Banking, Electronic Clearing Service (ECS), Electronic Funds Transfer (EFT) and tele Banking etc.

1.5 Service Quality in banking sector

The commercial banks act as a catalyst in creating opportunities for development of the economy, providing employment opportunities, facilitating the culture of savings among people and making it available to business community at large. With increased competition among domestic and foreign banks, it is important for the commercial banks in India to improve their quality of service since it plays an important role in shaping the satisfaction of the customers. Superior quality products and services provided by the company are well perceived by the customers that lead to higher customer satisfaction (Armstrong, 2002). Banks have realized the importance of providing quality service for their survival in today's highly competitive and global environment (Wang et al. 2003).Further on account of globalisation and liberalisation the banks need to accelerate, compete and offer products and services which are competitive. Today the customers are educated, better informed and knowledgeable, they demand for superior service quality which will help to increase the customers buying power. In the present scenario of competitive business, customers are likely to switch their banks with a purpose to seek better services for gaining satisfaction; this is a major challenge the bankers need to face in the near future (Silva, 2009). Thus it can be said that, offering quality services by the banks to its customers is considered to be an important differentiator between competing businesses in the banking sector.

1.6 Statement of the Problem

Researchers have recommended that keeping service quality as the cornerstone of organisations marketing strategy shall help in ensuring success in the business (Asubonteng et al., 1996). Customers today are knowledgeable, which has gradually led to a greater degree of consumer sovereignty, when it comes to choice of products or services (Blanchard & Galloway, 1994). Their choice of a bank is based on several factors like location, interest rates, quality of service and the reputation of the banks. However, service quality is seen as one of the key factor and thus has received

considerable attention by institutions. The financial services, particularly banks, compete in the same market with generally similar products and services; therefore service quality becomes an important weapon (Stafford, 1996). Parasuraman, Berry and Zeithaml (1985) revealed that service quality is an important strategy in gaining success and excellence in every organization. Othman and Owen (2001) stated that good service quality is the basis of every organization's success and includes the services sector too. In case of banks in India, on account of stiff competition, ever increasing customer expectation and advancement in technology, banks have to gear up to customer needs and requirements. If such a transition is not made, there is a constant fear that the customers may switch over to other banks who are offering superior quality services. Hence banks need to take appropriate decisions and plan effectively whereby they can satisfy their customers by introducing innovative products and services which will benefit the customers at large and further be loyal and indirectly help in increasing their financial performance. This research study assesses the experiences of the customers between the 'expected service quality' and 'perceived service quality' among the public, private and cooperative banks in India and makes an attempt to analyse its impact on their financial performance with intermediating effects on customer satisfaction and customer loyalty.

1.7 Organisation of chapters

The thesis consists of nine chapters, the details of which are given in the following paragraphs.

Chapter 1 Introduction

This chapter includes background and history of the Indian Banking Industry, the evolution phases of Indian banking Industry, Current developments in the Indian banking sector, service quality in banks, statement of the problem and organization of chapters.

Chapter 2 Conceptual framework

This chapter gives a brief outline of meaning and definitions of the concepts included in the study like service, quality, service quality, customer satisfaction, customer loyalty,

various dimensions of service quality based on servqual model is briefly explained and also include bank performance indicators.

Chapter 3 Literature Review

This chapter presents a review of existing research findings on service quality in banks, customer satisfaction and customer loyalty, dimensions of service quality, demographic variables and service quality perception, Customer satisfaction and Performance of the banks and finally based on the literature reviewed research gaps are identified.

Chapter 4 Research Methodology

This chapter explains the research methodology adopted in the study and gives an outline on the need and significance of the study, research problem, objectives of the study, hypotheses, scope of the study, data collection methods and data sources, sample size, period and area of study, tools for data collection, tools used for data analysis, Interrater and validity.

Chapter 5 Analysis of services offered by banks, service quality expectation and perception of customers and service quality gaps

This chapter is based on the first objective to study the expectation and perception level of the customers and identify service quality gaps across public, private and multi-state cooperative banks. This chapter includes introduction, methodology used for analyzing the data and details of the analysis done with interpretation and inferences drawn.

Chapter 6 Relationship between Service quality dimensions with Customer satisfaction and customer loyalty

This chapter is based on the second objective i.e. to study the relationship between service quality dimensions with the customer satisfaction and customer loyalty across public, private and multi-state cooperative banks. This chapter includes introduction, methodology used for analyzing the data and details of the analysis done with interpretation and inferences drawn.

Chapter 7 Relationship between demographic variables with satisfaction level of customers of the banks

This chapter is based on the third objective to study the impact of demographic variables on the satisfaction level of the customers pertaining to public, private and multi-state cooperative banks. This chapter includes introduction and methodology used for analyzing the data besides a detailed analysis done with interpretation and inferences drawn.

Chapter 8 Relationship between service quality and financial performance of the banks with its effects on customer satisfaction and customer loyalty

This chapter is based on the fourth objective of the study to analyze the relationship among four constructs viz. service quality dimensions, customer satisfaction, customer loyalty and financial performance of the banks operating in public, private and multi-state cooperative banks. This chapter includes introduction, methodology used for analyzing the data and detail analysis done with interpretation and inferences drawn.

Chapter 9 Findings Conclusion and Suggestion

This chapter summarizes and presents the major findings of the research study, conclusion, suggestions, limitations of the study, theoretical contribution, managerial implications and direction for further research.

Chapter Two
Conceptual Framework

In this chapter we are discussing the relevant concepts related to our topic which includes concepts like service, quality, service quality, customer satisfaction, customer perception, customer expectation, customer loyalty, service quality dimensions, modern services offered and financial performance indicators of banks.

2.1 Introduction

Business organisation is a legal entity, established to carry out activities with an intention to earn profits. Such activities include trading, manufacturing and the services sector. A service is defined as a set of benefits offered by the service provider to its consumers to facilitate them and satisfy them so as to reap higher profits and have a greater market share. Providing efficient, effective and up to date services to the consumers is the order of the day, particularly for service providers on account of stiff competition, technological up gradation and increasing expectation of the consumers' from the service providers to avail better products and services for consumption. Further just providing good service is not enough, such service should be supported with quality to win the hearts of the customers' and thus enjoy benefits in the long run. Service quality has become one of the most important driving forces for business to have sustainability and accomplish firm's objective (Rust and Oliver, 1994). Further improvements in the service quality shall result into customer satisfaction and loyalty, willingness to recommend to others, reduction in the complaints and improvement in the customer retention rates (Magi and Julander, 1996; Levesque and Mc Dougall, 1996). Thus the term service, quality, service quality, customer satisfaction, customer loyalty and firm's performance are very important from service provider's point of view. The following paragraphs explain the definitions, meaning and concepts which are used in the research.

2.2 Service:

In the words of Kotler, Armstrong, Saunders and Wong, service is related to any activity or a benefit that one party offers to another, such activity is intangible in nature and does not result into ownership of anything.

Christopher Lovelock says that, services are economic activities that create value and provide benefits to the customers at a specific time and place, as a result of which helps in bringing a desired change in or on behalf of the receiver of the service.

2.3 Quality:

The quality of products and services is the required to be achieved by the firms to achieve industrial growth. Thus it is pertinent to understand what quality means. The term quality has been defined by different management experts as follows:

Quality is considered as the inclusion of all specified features and characteristics as defined for product or service and its ability to satisfy the given needs as per the requirement of the user using it.

In the words of Edward Deming quality is a predictable degree of uniformity and dependability to low cost and suited to the market

2.4 Service Quality

The term quality refers to the ability of the product sold or the services offered by the firm to meet the expectations, needs and requirements of the customers. Service quality is referred as the difference between customer expectations for the service to be encountered and the perceptions of the services received by them (Oliver, 1980). They are basically a set of features, characteristics or attribute the consumer looks for as and when they either purchase a product or avail a service. It is not easy to measure service quality due to its unique characteristics like service being intangible, perishable, heterogeneous and inseparable (Rust and Oliver, 1994). Thus service is an intangible item, which should be understood and administered by the service providers to know how their clients' perceive it. The quality of service provided by the institutions need to be measured by taking into consideration the expectations of the customer before availing the service and further perception after the service is availed or after experiencing the services offered. The difference between the expectation level of the customer and the perception level of customers denotes a gap between the two, which is the measure of the service quality. If the gap between the two is narrow, it indicates better service quality and if the gap is wide it indicates poor service quality. Thus the success of the firm is to ensure that the service quality gap is narrow, so as to meet the

customer's expectations to a greater extent. Thus service quality today is referred to as an approach of assessing firms to judge their performance.

Researches done in the past have clearly indicated that the key to success for the business depends upon providing quality services to their clients. Thus service quality is used as an important parameter by the firms operating in the services sector to evaluate their performance. Since the banks operate in the services sector, they have to understand the needs and aspirations of their customers and design their services accordingly. Providing better services to customers' will help them having customer delight which will lead to customer's satisfaction and thus help to boost their profits. Against this background considering the relevance of service quality, in todays rapidly changing business where customer is the king, ensuring superior service quality, shall lead to customer satisfaction which may further lead to a loyal set of customer, on account of which the performance of the service organisation shall improve.

In the words of Parasuraman, Zeithaml & Berry service quality is:

Service Quality = Perceptions - Expectations

Gronroos (1982) defined service quality as the customers' perception of difference between the expected service and the perceived service.

In the words of Parasuraman service quality is the customer's evaluation between service expectation and service performance.

In the words of Asubonteng service quality is the difference between customers' expectations about a service before its use and the customer's perceptions after the service is availed. Further it is observed that the type and the quality of services offered by the firms vary from firm to firm, that has got a direct impact on the satisfaction levels of the customers.

In the words of Mccleary and Swan, service quality is referred as the difference between expectation of the customers for service prior to the availing it and their perception after receiving the service.

In the words of Gefan service quality is a subjective comparison wherein, the customers make between quality of service they expect to receive and the service they actually get.

2.5 Service Quality Dimensions

The service quality model was initially propounded by Parasuraman et al., (1988, 1991) which was named as the SERVQUAL model, an instrument developed to measure the service quality of the service providers. Many researchers and academicians have used this model to measure the quality of service pertaining to organisations in the services sector. The Servqual model consists of 22 statements that are compiled into five dimensions of service quality; these dimensions include tangibility, reliability, responsiveness, assurance and empathy.

2.5.1 Tangibility

The tangible dimension of service quality deals with the availability of physical facilities, equipment and personnel in the organisation. This dimension of service quality looks into physical aspects of rendering services to the customers such as physical facilities in the bank, appearance of the employees, tools and equipments used for providing the services. This dimension is more concerned with the aesthetic aspect of the bank.

2.5.2 Reliability

The reliability dimension of service quality is about the ability of the service provider to provide service which is dependable and accurate. This dimension shows the consistency of service towards performance of the service organisation and the extent to which the service provided are dependable and it further ensures the ability of the organisation to perform services which are dependable and accurate in a consistent manner. It contains five elements to assess the accuracy and credibility of the services provided by the banks. This dimension of service quality evaluates the promises of banks and its execution from the customers' angle.

2.5.3 Responsiveness

The responsiveness dimension of service quality takes into consideration the willingness of the service provider to assist their customers and deliver services promptly. This dimension reflects the readiness of the bank employees to provide quick and efficient services to its customers. In the services sector industry the customers is

very keen to receive better and effective services from the employees of the organisation.

2.5.4 Assurance

The assurance dimension of service quality involves the extent to which the customers can have trust in the employees of the service provider. This dimension showcases employee's knowledge about various services offered by the banks, courtesy of the employees in helping their customers and the ability of the employees to incorporate trust and confidence in the minds of the customers.

2.5.5 Empathy

The empathy dimension of service quality takes care of individual customers and also ensures that the customer receives good services from the service provider. This dimension looks into the ability of the employees of caring and paying individual attention to the requirements of the customers. In the services sector and moreover in banks concern towards the customers' needs and requirements plays a very important role and further it should be supported with individual attention of the employees towards their customers. Under this dimension of service quality, following aspects, like, employee's commitment to deliver service, customer handling and efficient delivery of service is to be taken into account.

2.5.6 Modern services

This dimension of service quality is been taken for the study considering the advance technology and sophisticated infrastructure incorporated by most of the banks to facilitate the customer in a better way and have good business. This dimension of service quality refers to bankers offering new products and services with advent of the rapid modern technology and better infrastructural facilities.

The modern services are as follows:

1. **Credit card (Payment cards)** → It is a facility provided by commercial banks or financial institutions to its customers. Such cards are issued at their request, whereby customers' can borrow funds at the point of sale so as to complete their purchases or avail the required services. It is basically a payment card which is

issued to the card holders at their request to enable them to pay a merchant for goods and or service based on the card holders' promise to the issuing authority to pay such amounts to be paid plus other agreed charges as per terms of the service provider.

2. **Debit Card (Plastic money)→** Such cards are issued to the customers' for making immediate payments, further this cards can be used by the card holder in place of cash while purchasing goods or availing service. Unlike credit card, in a debit card the money is instantly paid from card holder's bank account while executing the transaction.

3. **ATM outlets →** Such a facility is offered to the customers' of the banks and financial institutions with the help of which they can perform financial transactions within and beyond banking hours for withdrawing cash, depositing cash, fund transfers, obtaining account details, all at any point of time without the assistance of the bank staff.

4. **E-Cheques→** It is a facility where by the customers' of the banks can make payment with the help of internet to perform the same function as that of a conventional cheque. It is an electronic device which can be processed within fewer steps having more security features and includes additional features like public key cryptography, digital signatures and encryption. It is a compatible interactive web transaction which does not depend upon real time interaction nor is third party authorization required.

5. **NEFT/RTGS facility→** This facility is a nationwide payment method available to customer's to transfer their funds from one account to other individual account, firms and corporate from any branch to the receivers account branch having a bank account. On the other hand real time gross settlement (RTGS) is an electronic device used for transferring funds where in the transmission takes place on a real time basis. In this situation the beneficiary receives the funds transferred to his account on a real time basis.

6. **Telephone banking facility→**It is a facility extended by the commercial banks and financial institutions to their customers to perform their financial

transactions with their respective banker over the phone, this facility does not involve cash or documents and the customer's need not visit a branch of the bank nor an ATM counter.

7. **Online banking technology→** It is a facility offered to the customers' by the commercial banks for their convenience whereby they can carry out transactions with their respective banker without physically coming to the branch via internet. Such banking is also known as online banking or e-banking.

8. **M-banking (Mobile banking technology)→** It is an innovative way of transacting business via information technology platform, whereby clients can do their day to day bank transactions via a cellular device such as smart phones and tablets. With the help of mobile devices customers' can know their account balance, do fund transfers, bill payments etc. Here unlike internet banking, this service requires software for carrying out transactions with the service provider.

9. **Demat facility→**It also known as dematerialization of shares, a facility offered by banks or financial institutions to its customers wherein physical shares are converted into electronic form, It refers to a deposit made in financial institution that can be used by the investors for investing in shares or stocks and other financial assets. Under this system shares/securities are held electronically in a Demat Account, thereby eliminating the need for investors in maintaining paper certificates.

2.6 Customer expectation

It is one of the important issue faced by marketers is that, what the customers expect from the service provider. Infact it is regarded as the first and crucial stage in delivering service quality. The expectations of the customer revolve around their conviction about the products and services they receive from the organization that serves them. It is the reference point against which the performance of the service provided is judged. Thus it is imperative for marketers since customers compare the quality of the services received and determine these as the reference points when they actually experience and evaluate the service quality rendered by the service provider (Zeithaml et al., 2006).

2.7 Customer perception

Customer perception is something that is formed after the customer receives the services from an organization. Here the customer will compare his previous experience with certain services served by other firms; this can impact on customers 'perception of service quality. Thus customers 'perception results from how customers actually perceives service quality based upon their actual experience or influence of others, in connection with service received from the organisation.

2.8 Customer Satisfaction

Satisfaction is considered to be the outcome of a service availed or a product consumed by the end user, it signifies the level to which the customer is contended based upon his experience which is subjective in nature. Kotler (2000) in his study suggested that customer satisfaction can be built by organisations by delivering quality of goods/services, customer service and creating value. Satisfaction is associated with feeling of acceptance, happiness, relief, excitement and delight (Haoyer and Mach Innis, 2001). Satisfaction is not simply an evaluation of a service experience, but it is the influence of different components of the services rendered by the service provider (Dixit and Datta, 2010).

Customer satisfaction is referred as the collective outcome of perception, evaluation and psychological reaction as regards consumption experience related to a product or service. The perception of the customer is nothing but customers' interpretation of value perceived as against their expectations. Thus understanding the expectations of the customers' is an important prerequisite to deliver services or to manufacture products which will help in satisfying the customer and help the business in the long run.

The concept of customer satisfaction is gaining considerable importance in recent years on account of competition, higher customer expectation and changing preferences of the customers, which has drawn attention of academicians and researchers throughout the globe. The concept of customer satisfaction is more pertinent in the services sector, since the service provider has to highly rely upon the type of service provided, which will help in determining the satisfaction level of the customers.

In the words of Phillip Kotler customer satisfaction is referred to as, the person's feelings of pleasure or disappointment, which results only after product/services are compared with the perceived performance in relation to their expectation.

Churchill and Surprenant have coined customer satisfaction as, the outcome of purchase and use resulting from the buyers' comparison of the rewards and costs of the purchase in relation to the anticipated consequences. As rightly said, a satisfied customer is the best source of advertisement.

In the words of Westbrook customer satisfaction is an emotional state that usually arises in response to, after evaluating a particular service.

Infact customer satisfaction as a measure which helps to know how service and products offered by the oganisation, helps in meeting the expectations of the customers.

2.9 Customer Loyalty

The concept of loyalty is very important from business a point of view, besides it being the most important challenge faced by most of the businesses today on account of variety of services and products offered by competitors serving same market. Indeed, businesses today should focus not only on attracting and satisfying customers, but also developing long-term relationships with them, by customising their products and services as per their requirement and satisfying them. Hence the reputation of the business shall increase and indirectly help the business to retain the customers, who will offer them higher demand for their goods and services and shall ensure better results.

Customer loyalty indicates the extent to which customers are devoted to company's products or services and the tendency of the customers not to switch over to other products or services of the competitors. Customer loyalty is directly related to the satisfaction level of the customers, who will consistently purchase or avail the services of the same firm again and further send positive mouth of word to their friends and relatives. Thus customer loyalty refers to a situation where the customer develops a long standing preference or loyalty towards a particular product or a service. Further loyalty reflects on the repurchase intention of the customer, which will help the business in terms of increased sales and better financial results

Following are a few definitions given by various management thinkers pertaining to customer loyalty:

Heskett feels that customer loyalty represents the repeat purchase, and referring the company to other customers.

Pearson has defined customer loyalty as the mindset of the customers who hold favourable attitude towards a business, commit to repurchase its product/service and further recommend them to others.

In the words of Lovelock and Wirtz loyalty has been used to describe customers willingness to continue patronizing a firm over a period of time and recommend the firms products and services to their friends and associates.

Jones & Sasser has defined loyalty as, the feeling of attachment to or affection of the customer's for company's personnel, products or its services.

2.10 Financial performance indicators of banks

The performance indicators of the banks are as follows:

2.10.1 Capital adequacy ratio (CAR)

Every bank needs to maintain the capital adequacy ratio (CAR) at a specified percentage as directed by RBI. As per the latest RBI guidelines, banks operating in India must have a capital adequacy of 12%. Such percent is arrived by dividing the total of Tier-I, Tier-II and Tier-III capital with the aggregate of risk weighted assets (RWA). Thus symbolically, CAR= (Tier-I + Tier-II + Tier-III)/RWA. Tier-I capital comprise of equity capital and free reserves. Tier-II capital includes subordinate debt of tenure of 5 to 7 years, revaluation reserves, hybrid debt capital instruments, undisclosed reserves and cumulative perpetual preference shares. Whereas Tier -III capital comprise of short-term subordinate debt. From banks point of view higher the CAR, stronger is the performance of the bank.

$$\text{Capital adequacy ratio (CAR)} = \frac{\text{Tier I+ Tier II+ Tier III}}{\text{Risk weighted average (RWA)}}$$

2.10.2 Total advance to total assets

This is a ratio of total advances to total assets indicates the bank's aggressiveness in lending, which ultimately results in better profitability. In this ratio total advances include receivables from clients whereas the value of total assets excludes revaluation of all the assets.

2.10.3 Profit per employee

This ratio takes into consideration the efficiency of employees at individual branch level and further gives valuable inputs to assess the strength of a bank's branch network. Such a ratio is calculated by dividing the Profit after Tax (PAT) earned by the bank with the total number of employees. As far as this ratio is concerned it is said that higher the ratio, better is the efficiency of the management.

$$\text{Profit per employee (PPE)} = \frac{\text{Profit after tax (PAT)}}{\text{Total no. of employees}}$$

2.10.4 Net interest margin (NIM)

Net Interest Margin is the difference between the interest income of the bank and the interest expended as a percentage of total assets. This is considered as an important measure of bank's core income (income from lending operations). Further it can be said that higher spread indicates better earnings for given set of total assets. The interest income includes income received on dividend and interest expended included interest paid on deposits, loan from the RBI, and other short-term and long term loans.

$$\text{Net interest margin (NIM)} = \frac{\text{Interest income- interest expended}}{\text{Total assets}}$$

2.10.5 Interest income to total income

Interest income is the most important and basic source of revenue of the banks. This ratio indicates the bank's ability of generating income from the loans given. The said ratio measures the income generated from lending operations as a percentage of the total income of the bank in the respective year. The interest income includes income received on advances, interest received on deposits with the RBI and income received from dividend.

2.10.6 Return on asset (ROA)

Return on assets (ROA) is considered as an indicator of how profitable the business is pertaining to its total assets. Such ratio gives an idea as to how efficient management is in using its assets to generate earnings. Return on asset is also commonly referred as return on investments or ROI. This ratio tells you the amount of earnings created with respect to capital invested by the banks or assets acquired by them.

$$\text{Return on asset} = \frac{\text{Net Income}}{\text{Average total assets}}$$

2.10.7 Non Performing assets (NPA)

Nonperforming asset refers to loans or advances made by the banks or financial institutions that are in default or are in arrears as per scheduled payments of principal or interest. The debt in case of banks is classified as nonperforming when loan repayments have not been made for a period of 90 days.

2.10.8 Credit to deposit ratio (CD ratio)

Credit deposit ratio helps in understanding the amount of loans and advances granted out of the deposits mobilised by the banks. This ratio indicates the amount of a banks funds used for lending, which is considered as the main banking activity. This ratio is calculated by taking total advances/total deposits. Higher the CD ratio, higher shall be the utilisation of depositor's money which helps banks to earn higher returns on their assets.

2.10.9 Investment to deposit ratio (ID ratio)

The investment deposit ratio indicates the amount of investments made by the banks out of the deposit money mobilised by the banks from its customers. This ratio indicates the efficiency of the bank to invest its deposits and surplus cash to generate better profits. This ratio is calculated by taking investments/total deposits. Higher the ID ratio shall lead to better utilisation of deposits and help in gaining good returns.

Chapter Three
Review of literature

This chapter presents the reviews from doctoral theses, research work done and presented in journals, both print and online associated with the thrust of the research topic and identify the research gap. The literature review is subdivided into five subthemes which include: service quality and customer satisfaction, service quality, customer satisfaction and customer loyalty, dimensions of service quality in banks, demographic variables and customer satisfaction, service quality and financial performance of the banks.

3.1 Introduction

The quality of products delivered and the services rendered is considered to be one of the most important issues to be addressed by the manufacturers or service providers in the field of marketing today. Infact service quality in today's competitive environment is considered to be an important tool for a firm's struggle to differentiate itself from its competitors (Ladhari, 2008). Providing superior service quality helps the firms to control competitive position in the market and consequently help in determining the market share and profits. Banks being part of the service industry need to play a very important role in determining the satisfaction level of their customers. Satisfaction is determined in terms of superior service quality, innovativeness in services and products offered by them, loyalty, post purchase and retention of the customers.

The fate of the banks to sustain and survive in the present market scenario shall depend upon their ability to quickly respond to the changing requirements of their customers and interact with them constantly to understand their needs and problems from time to time. Banks should innovate effective ways to counter the changes existing in the present environment so as to survive and ensure effective ways and means of improving their quality of service. The opening up of the economy has led to competition from the private and foreign sector banks. The banking reforms initiated by the government in early 1990s have lead more emphasis on efficient handling clientele service. Banks today need to design new strategies to retain their customers, since the key of success is to increase the level of service quality. The private sector banks today have grown faster and bigger over the decades since liberalization, on account of advanced technology,

providing contemporary innovations, monetary tools and techniques for the betterment of their customers. Further the entry of cooperative sector banks has added to the competition in this sector. Banks today are trying their best to induce and attract customers by offering different services and products to retain them, whereby the bankers will witness effective sales and higher profitability. Thus against this background it is important to know the impact of service quality on customer satisfaction and whether it indeed leads to superior performance of the banks. In this context there is an extensive amount of literature available in the area of service quality, customer satisfaction and performance pertaining to various kinds of Banks both in India and abroad. The said topic has attracted a lot of attention of academicians and researchers on account of the huge competition in the banking sector. The ever increasing and changing needs of the customers and innovative services provided in some banks are benefitting and are doing well. The said research has got its own importance to know and understand whether superior service quality leads to better customer satisfaction and indeed helps in better performance of the banks.

The following literature survey is taken up of studies done in India as well as abroad and identifies the research gaps.

3.2 Service Quality and Customer Satisfaction

There are number of studies carried to assess the impact of service quality on the satisfaction levels of the customer's across the globe, the studies have identified that there is strong relationship between service quality offered by the banks and the satisfaction level of the customers. It is also found that on similar lines in the banking industry a link has been established between service quality and customer satisfaction. Infact customer satisfaction is an important tool for businesses to achieve success, since the future of an organisation is securing market position and better profits. Thus, it can be said that achieving superior service quality is one of the method to keep customers both satisfied as well as loyal towards the organisation (Perng, 2007).Service quality appears to be one of the important factors contributing to customer satisfaction (Cronin & Taylor, 1992). A number of academicians such as Parsuraman et al (1985) Groonos (1984) and others have tried to identify key determinants by which customer access service quality, which consequently results in satisfying customers. Thus keeping customer satisfaction as the focal point, service providers should compete in the market

successfully, since effective service quality helps in retaining customers and helps to generate economic benefits. Researchers and academicians across the globe have found out meaningful relationship between perceived service quality and customer satisfaction and suggest that banks should focus on their service quality as an important input to customer satisfaction so as to reap long-term benefits and success in business. Many studies in India and abroad have identified various dimensions of service quality that ultimately lead to customer satisfaction. Following are a few studies carried out to assess the impact of service quality that lead to customer satisfaction.

Parasuraman et al., (1985) concluded that there is a strong relationship between the constructs of service quality and customer satisfaction due to the fact that, if customers perceive higher level of service quality, it will result in increased customer satisfaction and vice versa lower level of service quality perceived by the customers shall result into a dissatisfied customer, Jain and Gupta, 2004 also arrived at the same conclusion.

Cronin and Taylor (1992) tried to test the causal relationship between service quality and customer satisfaction, the study was done in Zambia, the total sample for the study was 656 respondents. The study emphasized that researchers in marketing are not in agreement with the causal order of the constructs, and suggested that empirical justification is necessary to determine their relationship. The findings of the study revealed that perceived service quality provided by the service provider leads to satisfaction of the customers, Sureshchander et al., (2002); kaura (2013) came across similar findings.

Avkiran (1994) investigated the influence of key determinants of service quality on customer satisfaction in banks, the sample size for the study were 791 bank customers, the study concluded that the impact of service problems on customer satisfaction and their intensions to switch will arise in case proper services are not provided by the service providers.

Spreng and Mackoy (1996) tried to understand the relationship between service quality and satisfaction and pointed that the perceived quality of service was antecedent to satisfaction of customers. Infact the direction of quality and satisfaction relationship is well understood for services, but the question is whether or not the relationship varies according to particular settings or situations. Thus service quality and customer satisfaction do exhibit independence on each other and are indeed are different constructs from the customer's angle.

Aurora and Malhotra (1997) attempted to determine the factors determining customer satisfaction in the case of public and private sector banks situated in India. The study highlighted six factors that affect satisfaction of the customers in case of public sector banks which include routine operations, price for the service, situational factors, environmental factors, technology, and interaction, whereas in case of private banks, factors pertaining to staff to be were highly ranked and situational factor as the lowest items. Further the study observed that compared to public sector banks, the level of satisfaction customers' in private sector bank was higher, thus to increase the level of satisfaction of the customers pertaining to public sector banks the following measures were suggested like proper training and development of staff, regular market survey, personalized services, avoiding long queues and very attractive environment.

Oppewal and Vriens (2000) investigated the relationship between two constructs i.e. service quality and customer satisfaction, the study revealed that service quality gained significance with the passage of time due to increased competition among service firms and that customer satisfaction affects the customers' behavioral consequences which directly or indirectly affects the service firms, the studies done by Cronin et al., 2000; Choi et al., 2004;Wong et al., 2008 identified similar findings.

Caruana (2002) evaluated the relationship between service quality and satisfaction of customers of retail banks, the study concluded that satisfaction of the customer plays a very crucial role as a mediator between service quality and loyalty of the customers towards the business.

Kayis, Kim and Shin (2003) conducted a comparative study of Australian and Korean banks with an objective to find quality management practices and its outcomes. The study revealed that organizations should focus on service quality as an input to customer satisfaction for getting long-term benefits. Further it was suggested that banks have to realize the importance of service quality for their success and survival in today's highly competitive business environment

Curry and Penman (2004) reported that service quality is an inevitable differentiator to compete in the banking sector; the said study was done in Scotland. They further suggested that providing the right and timely service could help in retaining customers for long-term benefits. Thus banks should maintain the high level of services by effectively appropriate allocating the resources so as to meet the expectations and requirements of the customer.

Al-Fazwan (2005) assessed the various dimension of service quality in Saudi Arabian banks, the total sample size for the study was 202 bank customers, gap analysis was used considering the mean scores of expectation and perception of the bank customers were taken, expectation level of the bank customers were higher than their actual experience, further it was observed banks should concentrate on accessibility dimension and stated that the banks should take maximum efforts to increase the level of services in the bargain to meet the customer expectations.

Colette Anjali Rajjapa (2005) evaluated the customer service quality in Ugandian banking sector and identified gaps in the working of the commercial banks, the statistical tools used for the study were frequency distribution and cross sectional analysis. A total of 100 customers views were taken for the study. The research study brought out factors like banks should market their services, the service delivery is slow, customers have to wait in queue, and overall services rendered does not meet the expectations of the customer. Further, the banks frontline staff is not well trained, there is absence of information about latest services and the management lacks to motivate staff. The findings revealed that the bank was not advertising their newly launched products and services and the customers came to know from their friends, news papers and colleagues.

Regasamy and Kumar (2005) conducted a comparative study to evaluate the services provided by public, private and foreign banks, the study revealed that the foreign banks provided excellent service to their clients and have topped the list in terms of delivering qualitative customer service in comparison to public and private sector banks and the implications are for the public and private sector banks, who should improve their approach towards customers to perform better, Elango and Gudep, 2006 in their study done in Nigeria also arrived at the same conclusion.

Dash and Kumar (2007) examined that the expectations of the customer's exceeded their perceptions, with regards to various dimensions of service quality. They further observed that the perception of either positive or negative service quality was related directly related to the customer's future behavioural intentions.

Kirti Dutta and Anil Dutta (2009) observed that the expectations of the customers are higher than that of their perceptions towards the services offered and this gap between expectation and perception varies across the banking sector with tangibility having the highest impact on the overall customer satisfaction.

Hummayoun Naeem et al., (2009) assessed the influence of service quality offered by the banks on customer satisfaction in Pakistani. SPSS statistical package and AMOS was used to analyze the data. The study revealed that provision of good service quality was a strong predictor of satisfaction of the customer in the case of foreign bank as compared to public sector bank and further it was said that if service quality is effectively managed, it can contribute significantly towards the satisfaction of the customers'.

Mengi (2009) compared the perceptions of the customers pertaining to service quality of public and private banks based in Jammu, a total of 88 bank customers were the respondents, statistical tools like t-test and chi-square analysis were used to analyze the data, service quality scale developed by Parsuraman et.al was used to determine different dimensions of service quality, the study found that the customers of public sector banks were more satisfied with their service quality offered by the banks as compared to private sector banks. The dimensions of tangibility and reliability were considered important in influencing the satisfaction level of the customer in public as well as private sector banks, the study also provided that banks also need focus on other dimensions like responsiveness, empathy and assurance.

A. Ananth et al., (2010) analysed the service gaps among private sector, the sample constituted of 126 bank customers, gap score analysis and multiple regression model were used, the study revealed that the dimensions like empathy, reliability and assurance positively influenced the service quality in banks. The empathy dimension of service quality shows a highest gap between expectation and perception level of the customerss, thus banks has to reduce this gap by paying individual attention to understand specific needs of the customer, as far as gap in empathy is concerned the banks are expected to extend their bank timings whereas the gap in the responsiveness dimension can be resolved, whereby employees should willingly come forward to solve customers' problems. Thus it can be concluded that banks have to understand the changing needs, aspirations and expectations of the customers and accordingly design their products and services to create value.

S.Sivesan (2010) examined the service quality and customer satisfaction of the banks operating in the Jaffna district, Srilanka. A total of 143 customers of the banks were taken for the survey, the study concluded that there is an impact of the service quality on satisfaction levels of the customer. The study also pointed that banks should take

keen interest to streamline their services since it is directly related with customer satisfaction. Thus the banks have to identify their primary quality determinants to manage their customer expectation and educate the customer as regards various service offered by the banks, in the bargain to achieve customer satisfaction, researchers like Tahir and Wan (2005);Christopher Gan and Mike Clemes (2011) also observed significant relationship between service quality and customer satisfaction.

Ushad Subadar Agathee (2010) investigated the satisfaction of customers' based on various services provided by the banks. The results indicated that there is a huge gap between customer's perception and expectation for dimensions on reliability and responsiveness. The results highlighted the need for the banks to update their customer service and improve their quality towards the dimension of reliability and responsiveness by making the employees aware of the gap and improve those areas to reduce the gap.

Jayraman Munusamy et al., (2010) conducted a study to understand the service quality delivery and its impact on customer satisfaction pertaining to banks in Malaysia, a total of 117 bank customers were taken for the study, multiple regression model was used to test the relationship between service quality dimensions and customer satisfaction. The study revealed that a negative relationship was observed between reliability dimensions of service quality as compared to customer satisfaction. Whereas other dimensions like assurance, tangibles, empathy and responsiveness were found to be positive in relation to satisfaction levels of the customers.

Prasanta Padhy and Biranchi Swar (2011) identified the service quality gaps across private, public and foreign banks in Orissa. In all views of 440 bank customers were considered for the study. The study revealed that the performance of foreign banks were far better as compared to private and public sector banks; further the level of technology was the differentiating factor among these three groups of banks as far as perception of the customer was concerned. It was also observed that service quality was poor on all five dimensions among public sector banks, the private sector banks were slightly better but the foreign banks were relatively close to the expectation of the customers with regard to all five dimensions of service quality.

S.Dharmalingam and K.V.Kannan (2011) investigated to know the perception of the customer regarding service quality pertaining to new private sector banks in Tamilnadu. A seven point Likert's scale was used to collect the data and gap score analysis is used

for analysis. The results revealed that the service quality dimensions are positively correlated with satisfaction level of the customers, further it is observed that product variety was having the largest gap between expectation and perception in terms of service quality among new private sector banks, further it was also observed that banks should understand the changing needs, aspirations and expectation of the customers to create value and should have a dedicated CRM system which would help them to understand customer's worth and their needs from time to time.

S. Saraswathi (2011) measured the perception of customers on the performance of the private banks in Tamil Nadu, a total of 180 bank customers were interviewed, the statistical tools used were mean, standard deviation, correlation, correlation matrix. The study revealed that dimensions like tangibility and assurance were highly perceived by the customers while the reliability dimension was perceived low. The outcome of correlation matrix clearly indicated that high correlation exists between understanding the specific needs of customers and providing of services to the customers with best interest at heart, was important from the customers perceiving service quality provided by the private banks.

Saiful Islam and Md. Borak Ali (2011) in their study done in Bangladesh to measure service quality of Banks of selected private and public sector banks, the existing SERVQUAL model was extended to test the above linkage, the study revealed that dimensions like responsiveness, assurance, empathy; security and reputation had a strong impact on the satisfaction level of the customers. The study also observed that banks that provide assurance, empathy and offer a much secured atmosphere for their customer's stand a chance to have satisfied customer. The study finally concluded that the reputation of the bank had a strong and long lasting impact with regard to customer satisfaction.

Vijay M. Kumbhar (2011) evaluated the banking channels and customers' satisfaction among public and private banks in Maharashtra, a total of 190 bank customers were included in the study, statistical tools like chi square test, correlation and Kruskal Wallis test were used. The study revealed that there is a significant relationship between service quality and perceived value pertaining to customer satisfaction related to alternative banking. The study identified that factors like efficiency of banks, security, cost effectiveness, problem handling, responsiveness, fulfilment and accuracy, contact facilities, convenience, system availability, easy to use and customer compensation had

a significant impact on the satisfaction level of the customers'. Further the results indicated that, banks should consider the factors mentioned above to improve the service quality of alternative banking services in order to have increased level of customer satisfaction.

Muhammad Naeem Akhtar et al., (2011) attempted to analyse the relationship between customer satisfaction and service quality among Islamic banks in Pakistan, SPSS and Amos statistical tools were used. A total of 167 responses were processed for the study. The study brought forward dimensions like assurance, empathy and representativeness, which had a positive and significant impact on the satisfaction levels of the customers. Further the study suggested that customers of the bank perceive compliance and representativeness, as very important as compared to assurance and empathy dimension. Thus banks need to take appropriate steps to improve their services, invest more in training and development of human resources with an intention to handle their customer's in a professional manner.

Vibha Arora et al., (2011) investigated the various dimensions of service quality to analyze the impact on customer satisfaction, KMO test, correlation analysis and regression analysis was used for the study. The survey consisted of 318 bank customers from New Delhi. The study concluded that the dimensions like tangibility, reliability and service interaction of the banks takes care of factors like responsiveness, empathy, assurance and employee customer relationship. Reliability dimension was found as major factors to satisfaction where as tangibility empathy and responsiveness were not found to be important. The tangibility dimension was not considered important since physical environment was not a priority but customers' were more concerned about reliability of services provided by the banks.

Sulieman Ibraheem Shelash et al., (2011) examined the impact of service quality on Customer Satisfaction among Jordanian banks; the study revealed that customers indicated high satisfaction on all five dimensions of service quality examined in the study. The dimension of Responsiveness had the lowest mean, however, the correlation results showed that assurance and customer satisfaction was the highest, which implies that improvement in employees assurance to their customers need to pay due attention. The research concluded that service quality can be used as an important predictor of customer satisfaction, giving assurance the greatest impact on customer satisfaction, while empathy dimension had the least impact. Therefore banks should understand to

improve service quality in a bargain to improve customer satisfaction which is very vital for service oriented firms.

Ramlugun Vidisha Devi and Heman Kumar Singh Ramburuth (2012) in an attempt to assess the service Quality among Mauritian banks, a total of 110 bank customer were studied. The study reported that bank customers on an average are not satisfied with the quality of service offered. The customers here are dissatisfied with the reliability attribute since employees are not in a position to fulfil the promises made to their clients in a timely and accurate manner. Further lower gaps have been observed for tangibility which implies that customers are happy with the physical facilities offered and appearance of bank staff. The study also revealed that people with higher income are more dissatisfied with the service quality of banks. Finally it was suggested that banks should adopt cost-effective measures to improve their services in order to remain competitive and should prioritize upon the gaps.

Mesay Sata Shanka (2012) evaluated the relationship among service quality; customer satisfaction and Loyalty in Ethiopian banks, SERVPERF scale, Correlation and multiple regressions were used to analyze the data. The study surveyed a total of 260 bank customers the result revealed that by offering quality service had a positive impact on satisfaction levels of the customer. The said research proved that dimensions like empathy and responsiveness played an important role in determining customer satisfaction followed by tangibility, assurance, and lastly the reliability dimension was considered the least. The findings of the study indicate that by offering high quality service leads to increase in customer satisfaction, which will in turn lead to high level of commitment and loyalty by the customers.

Neelotpaul Banerjee and Santosh Sah (2012) undertook a survey to compare the perception of the customers as regards service quality offered by public and private banks in India, the statistical tools used were descriptive statistics, one way Anova and regression analysis. A total of 230 bank customers views were considered for the study, the result concluded that the perception of the customers' are more in private banks thus are satisfied. Competition wise the private banks are ahead of the public sector banks, thus public sector banks should focus on improving the quality of service in terms of tangibility, reliability, responsiveness and empathy. The private banks are in a better option as perceived by the customers and should try to deliver services as assured to the customers and boost their confidence. Thus it can be concluded that private banks have

been successful in achieving good relationship with customers on account of providing superior service quality vis-a-vie the public sector banks.

Jyoti Agarwal (2012) compared the services offered by public and private sector banks. A total of 50 customers of SBI & ICICI banks were taken for the study. A five point Likert's scale was used and for data analysis weighted mean was used. The study revealed that there exists a wide gap in terms of perception among public sector banks as regards overall service quality, when compared with private sector banks. On the other hand the said perceptual difference in private banks is narrow. The public sector banks should invest on tangibles particularly facilitate computer based banking, internet and intranet services, tele-banking, 'anywhere and anytime banking', etc., besides these physical facilities and communication material to be improved which will help in delivering quick and accurate services to their customers and reduce the burden on frontline staff.

Waqar ul Haq and Bakhtiar Muhammad (2012) examined the customer satisfaction among public and private banks in Bangladesh, descriptive statistics was used to analyze the data, total of 351 bank customers feedback was analysed. The study revealed that customer satisfaction varies according to the nature and type of the services provided. Further it was observed that highest customer satisfaction was seen in areas like price charged by the banks, convenient location of the branch and staff attitude. On comparison among banks it was observed that private bank customers were more satisfied on account of multiple branches at convenient locations and technology, which were not seen in case of public sector banks. Whereas the customers of private sector banks were more satisfied on account of reputation, reliability and prices which the banks charged on the services provided.

Maya Basant Lohani and Pooja Bhatia (2012) made an attempt to assess the service quality within public and private Sector Banks in Lucknow city, a total of 410 bank customers were selected for the study, statistical tools used were chi square test and gap model, the study revealed that there are perceptual differences pertaining to service quality offered by the banks. The respondents of both banks under study emphasized that the staff of the banks should improve to achieve customer satisfaction and should concentrate on the tangible factors like computerization, provision of physical facilities, etc. to attract the customers. The dimensions like reliability, responsiveness and

assurance were found to be the vital and strategic determinants of service quality which lead to satisfaction of customer pertaining to public and private banks.

Niveen El Saghier and Demyana Nathan (2013) analysed the service quality dimensions and Customers satisfactions in Egyptian banks, the statistical used were chi-Square test & regression analysis, the results of the study revealed that dimensions like reliability, empathy, assurance and responsiveness were significant in achieving customer satisfaction, whereas the reliability dimension of service quality was not significant. The study concluded that the infrastructure facilities provided by the banks were not considered to be important to help in providing quality service which will lead to customer satisfaction.

Ganesh Patidar and Devendra Singh Verma (2013) compared the service quality offered by Government and private Banks in Indore, the study was based on gap score analysis, in total 100 bank customers were interviewed. The study revealed that the customer satisfaction level in Private Bank was higher than Government Banks. The assurance attribute in Government banks was better as compared to private banks. The reliability attribute in both the banks were same. The responsiveness attribute which include willingness to help the customer, provide prompt service to customers etc was better in private banks. Thus to improve the service quality it was suggested that contact employee regularly, provide adequate training, provide knowledge of the latest technology.

S. J. Manjunath and Aluregowda (2013) aimed to find customer perceptions on service quality dimensions related to bank services, the statistical tools used were one sample t test and anova analysis. The study interviewed a total of 140 bank customers, the results indicated that service quality is an important aspect to achieve customer loyalty and will further lead to customer satisfaction. Thus banks should try to develop strong service quality and should be interested in assessing the degree of customer service dependence. Further it was observed that satisfied and loyal customers indicate positive perceptions of the banking services and in terms of loyalty, it is found that it does have a relationship with service quality and did affect consumer satisfaction for services rendered.

Snehalkumar H Mistry (2013) examined the customer satisfaction with special reference to banks based in Surat City, a total 17 bank customers were taken for the study, the statistical tools used for the study were the Servqual model with 5 point

Likert's scale, factor analysis and KMO Bartlett test of spherecity. The study revealed that customer give importance to the dimension of reliability, since they focus on how banks should fulfil the promises made and employees should take interest to perform their job. The second preference was the dimension of responsiveness which includes prompt service and willingness of the employees to help customers etc. and third preference is given to assurance factor, which includes safety of transaction, consistency in service etc. Thus irrespective of banks whether private or public they should focus on dimensions like reliability, responsiveness and assurance.

Vijay P.Gupta and P.K.Agarwal (2013) compared the customer satisfaction among public and private sector banks in Meerut region of Uttar Pradesh, the statistical tools used for the study were Servqual with 5 point Likert's scale, weighted mean was used. A total of 100 bank customers were interviewed. The study revealed that highest customer satisfaction was demonstrated in responsiveness dimension which include willingness to help customer and friendly attitude of staff, followed by the reliability dimension like proper guidance, customer support. Moderate satisfaction was observed in tangibility dimension, such as infrastructure, decor, empathy dimension such as banks timing and help desk. The public sector banks overall fell much shorter to the perceptions of their customers on all dimensions of service quality, whereas the perceptions of their customers in case of private banks on all dimensions were higher. The study insisted that new products and services should be introduced as per customer needs. Regular service should be given to the customer through the website, brochures and by conducting survey.

Aqeel Mukhtar et al., (2014) researched about the customer satisfaction towards financial services offered by banks. A total of 150 customers were surveyed and correlation analysis was used to draw necessary inferences. The study revealed that service quality is positively correlated with customer satisfaction thus service quality can be improved by improving service quality dimensions like tangibility and assurance. Assurance and tangibility dimension has significant correlation satisfaction, whereas reliability, empathy and responsiveness don't correlate with customer satisfaction. Thus banks should properly utilize their assets in right, provide better tangibility and assurance to customers and should focus on ATM machines, buildings and interior designs. Employees should assure accurate services to customers, treat in polite manner. Thus customer satisfaction is important for enhancing the quality of

banks, helping to develop loyal relationship with customers and gain competitive advantage over other financial institutions.

G Saravanakumar (2014) analysed the service quality and customer satisfaction pertaining to coop banks in Tamil Nadu, a total of 415 bank customers were selected for the study, statistical tools used were descriptive statistics, correlation and regression analysis, the study revealed that customer gave more importance to modern looking equipment, services as promised, prompt services, safe transaction and do services as whole heartedly. Thus banks should pay more attentions to these services. Further it was observed that the reliability and empathy dimensions predicts the customer loyalty, whereas dimension like tangibility, responsiveness, assurance, and empathy were found to be least predictors of customer loyalty in case of co-operative banks.

Achyut Gnawali (2016) analysed the impact of service quality dimensions on customer satisfaction in the Nepalese commercial banks, the study comprised of 292 bank customers, statistical tools like descriptive statistics, correlation and multiple regression was used to analyse the data, the study revealed that the dimensions like tangibility, reliability, responsiveness, assurance and empathy were significantly and positively correlated with customer attitudes in terms of satisfaction levels, thus it was concluded that the dimensions of service quality were very crucial towards achievement of customer satisfaction among public, private and joint venture commercial banks.

From the studies listed above it can be said that positive relationship exist between quality of service offered by the banks and customer satisfaction and have their own individual significance since the nature of the sector being dynamic, ever changing and is due to various technological advancements. The studies conducted in different parts across the globe indicate that the customers are basically interested in promptness, accuracy of transactions, pleasant infrastructure with modern amenities, proper approach of bank employees with commitment of services and speed in delivering services to the customers by the banks. The present study tries to analyse major reasons that lead to customer satisfaction and dissatisfaction on account of services rendered by the banks operating in different sectors and understand their awareness level of banking products, their major sources of information about banks and the intensity of usage of value added services offered by banks.

3.3 Service quality, customer satisfaction & customer loyalty

In the present era of competition providing quality service is considered to be the differentiating factor among the service providers, which will help in satisfying the customers and have long term benefits to the institution. The past studies clearly indicate that service quality has a positive and significant effect on customer satisfaction. Several researchers have studied the relationships between service quality, customer satisfaction and loyalty of the customer across the banking sector. They were of the opinion that service quality and customer satisfaction were considered to be the strong predictors for attaining customer loyalty (Tariq and Moussaoui, 2009; Han et al., 2008; Ehigie, 2006). Achieving high level of quality service is one method to have customers both satisfied as well as loyal to the firm (Perng, 2007). Service quality is recognised as one of the important antecedent of customer satisfaction and achieving customer loyalty (Herington and Weaven, 2009).

Caruana (2000) the study proposed that there is a link between service quality offered by the banks to achieve service loyalty via customer satisfaction, the study further reiterated the fact that all three constructs of service quality, customer satisfaction and loyalty in the service sector were related to each other, the said findings are in line with studies done by Huang & Liu, 2010; Kim et al., 2007.

Veloutsou et al., (2004) observed that there exist a strong positive relationship between service quality offered with the satisfaction level of the customers and their loyalty in the Greece banking sector. Many studies in the past have carried research in this area to see the effects of service quality on satisfaction levels of the customer and further observe whether the satisfied customer becomes loyal to the firm or not.

Razak et al., (2007) suggested that banks should start service quality improvement programs with an intention to enhance the customer satisfaction and customer loyalty.

Mosahab, et al. (2010) studied the relationship between service quality offered on customer satisfaction and loyalty by Sepah Bank in Iran. A total of 238 bank customers were taken for the study, Frequency distribution and multiple regression model was used to analyze the data, the results of the study revealed that on all aspects of service quality dimensions of customers' expectation, are higher than their perceptions and but quality of services offered by the bank to the customers is not up to the mark. Besides, this, the findings of the research indicated that the satisfaction plays the role of a mediator between service quality on service loyalty.

Saiful Islam and Md. Borak Ali (2011) measured the service quality of banks. The study revealed that dimensions like responsiveness, assurance, empathy; security and reputation have a strong impact on the satisfaction level of clients'. Banks having highly responsive employees shall help to create strong customer bondage. The banks have to provide assurance, empathy and offer secured atmosphere to their clients to enhance customer satisfaction. The result of the study clearly shows that banks' reputation has a strong impact on customer satisfaction. Thus it can be said that the above listed five variables are the key to customer satisfaction, which should be seriously considered by the banks.

Mesay Sata Shanka (2012) examined the relationship between service quality offered by the banks with customer satisfaction and customer loyalty in the Ethiopian banking sector, the sample size for the study were 260 bank customers and statistical tools used for the study were correlation and multiple regressions, the study concluded that overall customer satisfaction has a positive and significant relationship with service quality. In addition, provision of high service quality lead to increase in customer satisfaction, which further helps in determining loyalty of the customer towards the bank. The findings of the research also indicated that by offering high quality service shall increase customer satisfaction, which in turn leads to high level of customer commitment and loyalty.

S. Vijay Anand et.al (2012) reported in their study that there is an impact of providing quality service on the satisfaction level of the customer and loyalty in the case of Indian banking sector. A total of 50 bank customers in Salem District in Tamil Nadu, were chosen for the study, statistical tool used for the study were exploratory factor analysis, correlation, analysis and multiple regression analysis, the study revealed that out of five service quality factors considered, assurance is having a highest mean score of Servperf and the bank should concentrate on reliability as it has the least mean score of Servperf. It is also observed that there is a significant association between all service quality factors and customer satisfaction as well as with customer loyalty. While analyzing the antecedents of customer satisfaction and loyalty, factors like responsiveness, reliability and empathy were found to be significantly influencing.

Ariful Islam et al., (2013) assessed the impact of customer satisfaction on customer loyalty through service quality in the Bangladesh banking sector, a total of 20 customer were chosen for the study, statistical tools like descriptive statistics and correlation

analysis were used to test the data set, the study indicated that customers of the banks were satisfied with their service quality. Although customers do not have the tendency to switch their bank, they are not yet that much active in advertising about their bank, meaning customers are average loyal. Thus there is enough scope for the banks to improve their service quality to attract customers and effectively face competition and prevent their switching to competitors. Thus, it can be said that, providing quality service has a great impact on and intense relationship for gaining satisfied and loyal customers.

Deepika Arora and Saxena (2013) investigated the relationship between service quality with customer satisfaction and loyalty of customer in the banks based in Delhi, the sample size for the study were 300 bank customers, statistical tools like descriptive statistics and correlation analysis were used. The findings of the study revealed that the service quality attributes were positively correlated with customer satisfaction. The dimension of empathy showed highest positive correlation with customer satisfaction followed by assurance, whereas the dimension of tangibility revealed the least positive correlation with customer satisfaction. Further in the study it was observed that, there a positive relationship exists between customer satisfaction and loyalty of the customers in the banking sector.

Sita Mishra (2014) examined the relationship among service quality with customer satisfaction and customer loyalty in internet banking in Gaziabad, a total of 205 bank customers were chosen for the study, statistical tools like KMO Bartlett's test, factor analysis and SEM was used to draw necessary conclusion. The study revealed that service quality was significantly related with satisfaction and further the satisfied customers of the banks were highly associated with loyalty. Thus, it was concluded that improvements in service quality by the banks will lead to higher satisfaction of the customers, which may result into developing loyalty among them. Further it was observed that internet banking service providers should evaluate various dimensions of online service which industry specific.

Ngo Vu Minh and Nguyen Huan Huu (2016) analysed the relationship between service quality, satisfaction of the customers and their loyalty in Vietnamese retail banking sector, a total of 261 bank customers were interviewed, confirmatory factor analysis and structural equation modeling technique was used. The results of the study provided that service quality and customer satisfaction were considered to be the most

important antecedents in achieving customer loyalty, further it was also observed that customer satisfaction acts as a mediator between service quality and customer loyalty. These findings suggest that there exist strong relationships between these constructs and suggest that the banks should consider customer loyalty management as an important aspect from the banks perspective.

Feras Mi Alnaser et al., (2017) conducted a study to analyse the relationship between the dimensions of service quality, customer satisfaction and loyalty pertaining to Islamic banks in Palestine, a total of 500 bank customers were surveyed, the statistical tool used was structural equation model to test the hypothesis, the study revealed that the extended model proposed had a significant impact on satisfaction levels of the customer and loyalty in certain areas. The newly proposed model of service quality has a major impact on both customer satisfaction as well as loyalty in the banking sector, the said results are in line with studies done by Samraz Hafeez et al., (2012); Saad Ahmed et al., (2016).

Vithya Lenin Kumar (2017) investigated the relationship between service quality offered by the banks with customer satisfaction and customer loyalty in Srilanka, a total of 300 bank customers views were considered, statistical tools like factor analysis, CFA and smart PLS were used to analyse the data, the outcome of the study revealed that there is a significant and direct relationship between the constructs of service quality and satisfaction of customer, also between customer satisfaction with loyalty and also between service quality with loyalty of bank customers. Further it was also observed that customer satisfaction acts as a mediator between service quality and customer loyalty in the banking sector.

Daniel Kasser Tee et al., (2018) examined the interrelationships between service quality, satisfaction of the customer, and loyalty among the banks in Ghana a total of 850 bank customers were surveyed, the statistical tools used were structural equation model and inter correlation analysis. The study revealed that all five dimensions of service quality positively and significantly affected customer satisfaction. Further it was observed that service quality influences customer satisfaction. In the similar manner satisfaction of the customers was positively correlated with their loyalty. Service quality was seen to positively correlated and significantly affecting customer loyalty. Thus the study suggested the banks to work at improving service quality, which will indirectly

influence the satisfaction of the customers and shall be loyal; the findings of the study are in line with studies done by Mubbsher Munawar Khan et al., (2014).

From the above paragraphs with respect to inter relationship between customer satisfaction, customer loyalty and service quality the researchers and academicians in the past have observed positive relation between service quality and customer satisfaction. Commitment and attentive attitude of the employees has resulted in earning the satisfaction levels and loyalty of the customers. Regardless of the service quality measurement, from the past studies it is evident that service quality does influence customers perceived value, satisfaction, and loyalty (Shanka.M.S, 2012).Further effective service quality leads to easiness in doing services and reliability of the service offered helps to attract more customers. Thus it can be said that service quality lead to customer satisfaction which in turn helps in gaining loyal customers. These three constructs has been considered as the main differentiators for the success of banks in todays highly competitive and regulated markets.

3.4 Dimensions of Service Quality in banks

Service quality is considered as a crucial area to be looked in by the service providers to improve upon their services that will help to increase their sales and profitability. Considering the importance of service sector in a given economy, businesses operating in the services sector should regularly assess and find the determining dimensions of service quality to improve their services and facilitate their customers in a better way.

In a service oriented business service quality is recognized as the multidimensional construct where a number of dimensions are considered by different researchers across the globe, on the whole all service quality dimensions can be broadly clubbed into three major groups: outcome quality dimension, interaction quality dimension, and physical service environment quality dimension (Rust and Oliver 1994; Brady and Cronin 2001). The outcome quality refers to the customer's assessment of the core service which is the most motivating factor for obtaining the services. Interaction quality is the customer's assessment of the process of service delivery, which is rendered typically with the help of physical interface between the service providers, the person, or via technical equipment, and the end user (Gronroos, 1984). Whereas physical service environment quality refers to the consumer's evaluation of any tangible aspect associated with the facilities or equipment that the service provider is providing.

Many researchers and academicians across the globe have undertaken studies on service quality pertaining to various categories of banks and have identified various dimensions of service quality. Following are some researches done wherein different dimensions are service quality are identified.

Aurora and Malhotra (1997) examined the marketing strategies adopted by private and public sector banks in India, the study found six factors that help in determining customer satisfaction in case of public sector banks which include day to day operations, price quoted, situational factors, environmental factors, technological factors, and interaction. Whereas in case of private sector banks, factors identified include staff factor and situational factor as the lowest ranked items. Further factors like price of the service, promotion of the products had been explored by study in private sector banks. Finally it was concluded that private sector banks have a edge over public sector banks in terms of customers' level of satisfaction.

Heggade O.D. (2000) analyzed the range of customer services provided by the banks along with their impact on customer-banker relations. The study found that public sector banks, although improved, are far behind their counterparts mainly because they are operating mostly on labour-intensive basis rather than computerized operations and using modern electronic systems to facilitate the customers in a better way.

Dhillon et al., (2003) investigated the impact of service quality on satisfaction level of customers in public and private sector banks. The study found that private banks were better in terms of credibility, access, communication, understanding customers, tangibles, reliability, responsiveness, competence and courtesy as compared to public sector banks which lacked on most of the above attributes, on the other hand public sector banks stood ahead in terms of safety and security point of view.

Suresh Chandar et al., (2003) analysed the crucial service quality dimensions that lead to satisfaction, further it was observed that service quality being a multidimensional construct have basically five dimensions which include, core service which is the content of the service, service delivery which includes reliability, responsiveness, assurance, empathy, truth and recovery, non human element which includes process, procedures, systems and the technology used, tangibles which includes equipment, machine and employee appearance, and finally social responsibility which is the well being of society. The results depicted significant difference in service

quality offered by public, private and foreign banks as regards dimensions of service quality.

Hinson, R et al., (2006) conducted a study to investigate the determinants of service quality in various banks in Ghana. The study observed that all the dimensions of service quality contributed significantly to achieve service quality in banks of Ghana. Among the service quality dimensions identified, it was the human element of service quality which was found to be highly predictive to achieve service quality in various sectors of banks in Ghana.

Mishra J.K. and Jain M. (2007) identified various dimensions of customer satisfaction in nationalized and private sector banks, it was found that satisfaction of the customers is considered as an invaluable asset for the modern organizations who are interested in providing unmatched competitive edge thus helping in building long term relationship as well as brand equity for their institutions. The researchers suggested that the best approach to satisfy and retain customer is to deliver high level of customer service which will lead to a satisfied set of customers'.

Sudesh (2007) made a comparative study among public and private sector banks as regards service quality revealed that there was poor service in public banks mainly because of deficiency in tangibility, lack of responsiveness and empathy on the part of the employees., On the other hand private banks, were found to be more reformed. Above all, the foreign banks were relatively close to the expectations of their customers with regard to dimensions of service quality. Further, the study also revealed that the service quality variation across demographic variables, and suggested that banks should pay attention to the potential failure points and should be highly agile and responsive to the problems faced by the customer.

Brahmbhatt, M and Panelia, D (2008) assessed the service quality and customer satisfaction among public, private and foreign banks concluded from that foreign banks were providing better services to its customers as compared to public and private sector banks thus the satisfaction level of the customers of foreign banks was better as compared to the customers of public sector banks and private sector banks. The important dimensions identified were the human approach, technological factors, responsiveness and approach of the employees that lead to improvement in service quality of banks.

Vanniarajan T. and Nathan S.M. (2008) made a comparison of Servperf scale pertaining to various service quality factors and analyzed its impact on the satisfaction levels of customers. The outcome of the study was that there were significant variations as regards various dimensions on satisfaction and that satisfaction lead to different behavioural intentions of the clients. The paper conclude that banks providing reliable transactions with promises of responsiveness and assurance were considered to be most appealing services so as to the target the consumers to be satisfied.

Zillur Rahman (2008) conducted a study to measure service quality of banks in India. The statistical tools used were Servqual model, principal component analysis, Bartlett's test of spherecity. The study examined and evaluated some factors like - competitive service quality evaluation scores, expectation, perception of clients and gaps among bank services. The results indicated that the customers had perceptual problems with regard to banking service experience and thus recommended that managers should be more aware of their roles and should provide their staff with adequate training in order to offer a consistent and high standard of service to their customers'.

Pal and Choudhury (2009) identified four dimensions of service quality that were instrumental in determining satisfaction levels of the customers, these factors include customer – orientedness like providing prompt service, being courteousness, having knowledge, more operating hours, personal attention, ability to understand the customers, competence of the employees like being responsiveness, delivering right service, dependability of service and safety, the tangibles include provision of physical facilities and placing of appropriate materials that will benefit the clients and convenience of branch location and the ATM location points.

Ananth, A et al., (2010) conducted a service gap analysis among private sector banks of Nagapatinam district of Tamil Nadu, data was collected from 200 bank customers, gap analysis and multiple regression was used to analyze the data set, the study revealed that the gap analysis showed that empathy dimension was having larger gap between expectation and perception of the service rendered by the banks. The analysis also depicted that the dimension like empathy, reliability and assurance positively influenced the service quality of the banks; the findings of the study are in line with the conclusion drawn by G. Santhiyavalli (2011).

Bedi Monica (2010) pointed out that there is a huge difference in customer perception of service quality offered by the public and private sector banks. It was also observed

that the dimensions of tangibility, responsiveness, reliability, assurance, technological factors of service quality and the private banks were perceived to have better service to its customers. On the whole it can be opined that the customers of private banks of were found to be more satisfied than that of public sector banks on account of proving superior and upgraded services to their clients from time to time.

Kumar, Kee and Charles (2010) undertook a study of servqual dimensions which were significant among the banks so as to determine satisfaction of their customers. The response of the customers was taken in relation to their expectations and perceptions level of satisfaction. The study revealed that service quality dimensions like competence of the employees in delivering services and the convenience of the services were found to be the dominating factors as compared to dimensions of tangibility and reliability on the part of the banks.

Sandip Ghosh Hazra et al., (2010) identified the service quality dimensions pertaining to public and private sector banks, the study concluded that in case of public sector banks should focus more on dimensions like assurance and empathy on the part of the employees, tangibles in relation to interiors in the banks and from the private sector they were expected to focus on providing reliable services to their clients.

Zabkar et al., (2010) indicated in their study that perceived service quality leads to positive attitude to visitor's satisfaction as well as their behavioural intentions. Further it was also observed that foreign banks were relatively close to the expectations of their customers in comparison to public and private sector banks established in India.

Prasanta Padhy and Biranchi Swar (2010) determined the customer satisfaction and service quality gaps within selected categories of banks, the results revealed that the performance of foreign banks seem to be better as compared to private and public sector bank. The study has established that it was the technological factors that seem to be the differentiator factor among the three groups of banks as far as perception of the customer was concerned. Among the banks under study public sector, private sector had very poor service quality as compared to foreign banks which were relatively close to the expectation of the customers with regard to all five dimensions of service quality.

S.Dharmalingam and K.V.Kannan (2011) examined the service quality among private retail banks in Tamilnadu, a total of 240 customers of the banks were taken for the study, statistical tool used were Servqual scale with a seven point Likert's scale. The study revealed that product variety is having more gaps between customer expectation

and perception of service quality. Thus banks should know the changing needs of their customers, aspirations and expectation of their clients, in the bargain to create value and have a strong CRM system in place that would help the banks to understand the worth of the customers.

Abed Abedniya and Majid Nokhbeh Zaeim (2011) attempted to measure customers perceived service quality by using difference between customer expectation and perception in context of Islamic banks in Malaysia, the statistical tools used were EFA, correlation analysis, descriptive statistics, Multiple regression analysis, the study interviewed 102 bank customers. The paper revealed that there is difference between customer perception and expectation in relation to reliability dimension of service quality. It was also observed that customers are able to use banking services everywhere on account of extensive services provided by the banks and other factors like confidence of the customers, empathy, tangibility, assurance, responsiveness and compliance of the services rendered by the bank

S. Saraswathi (2011) ascertained the perception of customers on service quality performance in case of private banks, the statistical tools used were, mean, standard deviation, correlation matrix. A total of 111 bank customers views were taken into consideration. The study revealed that dimensions like tangibility and assurance were found to be highly perceived by the customers while other dimensions like reliability were perceived low compared to other dimensions of service quality by the customers of the banks. The correlation matrix done revealed that their exists high correlation between employees understanding needs of customers and the staff giving customers' their best interest at heart, these two factors were important from the customers point of view to determine service quality by the banks.

Md. Abdul Muyeed (2012) evaluated the service quality among retail banking in Bangladesh indicated that the perception of the customers' were very high pertaining to promptness and accuracy in transactions followed by safety of investments and keeping confidentiality of account and transactions, whereas low level of perception was observed in the case of modern equipments and interior decor within the banks. Further it was observed that due to increasing competition the banks need to understand the weak areas to meet the perception of their customer pertaining to service quality.

Maya Basant Lohani and Pooja Bhatia (2012) assessed the service quality among public and private banks based in Lucknow. Data was collected from 410 customers,

Servqual model with 5 point Likert's scale, chi square test and gap model was used. The study revealed that there exists a difference in perception as regards overall service quality provided by respective banks. The respondents of both the banks emphasized on improve the staff quality to improve on customer satisfaction and should also concentrate on the tangibility factors which include computerization of banks, providing physical facilities, etc. to attract the customers. Further it was also observed that dimensions like reliability, responsiveness and assurance were found to be vital determinants to achieve customer satisfaction in case of both categories of banks. Finally it was concluded that if banks want to retain customer's life long, they should give their 100% to achieve customer satisfaction which will automatically foster to have customer delight.

Vibhor Jain et al., (2012) evaluated the service quality provided by private sector banks; the study comprised of 100 bank customers, descriptive statistics and ranking method was used to analyse the data, the study concluded that the dimension of responsiveness was the most critical factor to ascertain customer satisfaction. However, for the banks to be successful they need to be more innovative in terms of the product offered, have transparency in their services and compete in the market with new ideas and innovations which will lead to satisfaction of the customers'.

Ramlugun Vidisha Devi and Heman Kumar Singh Ramburuth (2012) assessed the service quality rendered by banks in Mauritius, Servqual model was used to gather the data, a total of 110 bank customers were considered for the study, the results revealed that bank customers were not satisfied with quality of service of offered by the banks. Principally, the customers were dissatisfied in relation to reliability attributes, bank employee's ability to perform a promised service in time and in a proper and accurate manner. On the other hand, it was observed that lower gap as regards facilities offered by the banks and appearance of the bank personnel. The study concluded that banks have to identify cost-effective ways of delivering service in order to remain competitive and should focus on prioritizing gaps.

Waqar ul Haq and Bakhtiar Muhammad (2012) studied the satisfaction level of customers' pertaining to public and private sector banks in Peshawar. A total of 351 customers of public and private sector bank were surveyed, the tools used were 5 point Likert's scale, mean and standard deviation. The study revealed that customer satisfaction vary according to the nature of the services, highest customer satisfaction is

shown in areas like price charged, convenient location and staff attitude. The customers of private banks were more satisfied with their bank on account of multiple branches, convenient locations and technology. Whereas customers of public sector banks were more satisfied with reputation, reliability and the prices charged. On comparison among the banks in terms of customer care service, private sector banks were favored than public sector banks.

Niveen El Saghier and Demyana Nathan (2013) evaluated the influence of service quality dimensions on customer satisfaction in Egyptian banks. SPSS statistical package was used to analyse the data and statistical tools like Chi-Square Test, Regression analysis were used to draw necessary conclusion. The study concluded that customer satisfaction is significantly affected by dimensions like reliability, empathy, assurance and responsiveness, while the dimension of tangibility was considered insignificant. The study also indicated that to achieve customers perception the reliability attribute was the highest and lowest was in the assurance attribute. The tangibility attribute had no significant effect on customer satisfaction. The bank services where in infrastructure facilities are not considered to be important, thus the study concludes that tangibility is required in providing quality service, but not a must.

Snehalkumar H Mistry (2013) measured the customer satisfaction in the banking sector in India; the study revealed that customer gave highest priority to reliability dimension and gave more focus on how banks shall fulfil their promises made and show their interest to do work. Further it was observed that second preference was given to responsiveness dimension which includes promptness in delivering service and willingness to help the customers. The third preference was given to assurance attribute which included bank safety of transactions, consistency in the services provided etc. Thus the banks irrespective whether private or public should focus on dimensions like reliability, responsiveness and assurance. The banks should give training to their employee from time to time which will help them to give personalized services to their clients.

Vijay P.Gupta and P.K.Agarwal (2013) compared public and private banks to analyze customer satisfaction, the study concluded that the highest customer satisfaction was demonstrated in the area of responsiveness which include willingness to help customer, friendly attitude of staff, secondly the reliability area which include guiding customer, customer support. On the other hand, the moderate satisfaction was observed in

tangibility area which include physical facilities, décor and finally empathy area which includes business timing and guiding the customers'. The banks should regular service to the customer through their website, brochures and by conducting regular consumer survey.

From the above literature studies it can be said that there are a number of different dimensions and approaches for measuring service quality. The customer perception is important in the measurement of service quality. The customers' perceived service quality which basically consists of five main dimensions: Reliability, Assurance, Tangibles, Empathy and Responsiveness. Besides these dimensions many new dimensions/ approaches have been adopted by researchers in the measurement of service quality. Thus service quality is considered as the key component especially for service organisation to have competitive advantage and get increasing attention for those organisations that are committed to improve their overall performance.

3.5 Demographic variables and customer satisfaction

From the studies carried in the past it has been observed that demographics of the respondents, depending upon the service provided may or may not influence the consumer decision making process. In the service industry, a few empirical studies have reported the influence of demographics variables like age, gender, income, occupation have an impact on customer service quality perceptions and behaviour. The present study evaluates select demographic factors which have been examined in the past on the service quality perception of bank customers across various categories of banks. The following paragraphs give a brief idea of impact of demographic variables on the service quality perception and satisfaction levels in India as well as abroad.

Boyd et al., (1994) investigated the bank selection criteria of the respondents on the basis of demographic characteristics, the study found that there was a significant difference between service quality perception of white collar customers and the customers having low income. It was also further reported that gender and responsibility of the customers are shaped on account of cultural, social and religious factors.

Sousa-Poza et al., (2000) concluded that consumer satisfaction is also impacted by their income level and occupation, further the perception of men and women within the banking service quality is nearly similar, hence the consumer's gender is an exception for determining their satisfaction level.

Urban and Pratt (2000) opined that demographic attributes of the clients should be considered by the managers of the bank to understand their satisfaction levels towards the bank. It was observed that the customers perception of service quality differs within the banks differ in terms of gender, ethnicity, education and income of the customers'.

Sureshchandar.G.S, et.al (2002) examined the impact of demographic variables on the customer satisfaction, the study observed that consumers of different age groups and gender show different degree of satisfaction based upon their individual feeling within the banking service quality they expect.

Mittal and Kamakura (2001) observed that same degree of satisfaction, men are less likely to repurchase the same product or service than women. Besides, consumers with higher level of education have lower probability to repurchase the same brand compare with the customer with lower educational levels. Furthermore, older customers have higher likelihood of repurchasing with a given level of satisfaction than younger customers; Caruana (2002) also came across similar findings.

Paswan et al., (2004) examined the quality dimensions related to financial services and also to examine their relationship with demographic variables and various dimensions of service quality. The study revealed that low transaction cost was identified as the most important factor and variables like income, place of residence, gender and home ownership emerged as the strongest determinants of service quality among the demographic factors that lead to satisfaction.

Spathis et al., (2004) assessed the impact of demographic variables on the service quality of the banks, the study concluded that customers perception of service quality could be largely affected by the demographic features of the customers especially gender, occupation and income of the clients. Further it was observed that gender and income influences the customer perception of service quality of the banks which may or may not lead to their satisfaction level.

Bhat and Mushtaq A. (2005) investigated service quality among banks and tried to study its variation across demographic variables of the customers. A total of 800 bank customers were surveyed, statistical tools like Kruskal- Wallis & one-way Anova test were used to determine the relationship. The study revealed that service quality of foreign banks was much better than that of Indian counter parts and it was also observed that there are service quality variations across demographic variables like age, income,

occupation, geographic location of banks etc affecting the satisfaction level, irrespective of Indian or foreign banks.

Ogenyi Ejye Omar (2007) determined the relative strengths of factors used by Nigerian consumers to select their retail bank and evaluate their behavioural and demographic characteristics. The results of the study showed that there are significant differences in the choice factors used by male and female customers in selection of bank for patronage. The study further suggested that managers of the bank should take into consideration both female and male segments while determining strategic planning in order to be competitive in the market.

Ganesan-Lim et al., (2008) concluded that it is important to the bankers to understand the relationship between the perception of customers towards service quality and demographic information such as age, gender, occupation and income level, as such information is useful for ensuring that there are suitable services or products available for the target market which may lead to satisfaction of the customers.

Mavri and Ioannou (2008) investigated the behaviour of the bank customers among banks in Greek market. The study revealed that the quality of service offered by the bank in terms of various products and services with the brand name of the bank's have a positive effect to decrease the switching behaviour of the customers, on the other hand demographical attributes like income, gender and educational qualification of the respondents has a significant impact as regards satisfaction of the customers.

Ghazizadeh et al., (2010) examined the impact of service quality on the satisfaction level as regards demographic variables in state owned banks of Tehran, the study revealed that customer satisfaction and factors like age, income and educational level of the clients had influenced the propensity to stay with their current banks.

Murthy (2010) concluded that banks today have to be efficient in dealing with individual customers, traders and companies. Further it was also opined that banks to strive hard to retain the existing customers in the face attracting new customers. .

Ghosh and kailash (2010) argued that customer's knowledge, income, gender and occupation of the respondents is one of the most important determinants which can affect the satisfaction level of the customers across various categories of banks.

Ushad Subadar Agathee (2010) analysed the impact of service quality gaps on the satisfaction level of the customers, the statistical tools used were Mann Whitney test & Kruskal Wallis test, a total of 190 bank customers were interviewed, the study

concluded that there are increasing needs for bankers to meet customer expectations for faster and better service with the number of branches and further the study revealed that customers of high income group are more likely to be dissatisfied with banks services and thus it was suggested to improve the customer service quality. Further it was also observed that age, gender and educational qualification has a significant impact on the satisfaction level of the customers.

S.P. Singh and Sunayna khurana (2011) analysed the service quality gaps and customers' satisfaction among private banks in Hissar revealed that perception of customers' in case of private banks was lower than their expectations and there is no significant difference in the satisfaction levels between male & female customer pertaining to their satisfaction, personal contacts of employees as well as quality of services of bank. This indicates that bank customers irrespective male or female are just satisfied with services of private banks. They have more expectations with banks, thus banks should adopt following measures to reduce the gaps like staff should have customers' best interest at heart, pay personal attention, be friendly, have courtesy and promises given by the employees should be adhered to.

Vijay M. Kumbar (2011) studied the internet banking services offered by banks in India and examined the relationship between customer's demographics and their satisfaction in internet banking. The results showed that highly educated customers are using this internet facility to carry out their transactions, however, it was observed that customers' with less educational qualification and not being tech savvy were not using internet banking service. Thus, the study suggested that the banks should simplify the internet banking services and encourage people who are less literate to use internet banking services for their convenience.

S. Vijay Anand and Selvaraj (2012) conducted a study to analyse the impact of service quality on demographic variables, in all 50 customers of state bank of India from Salem District in Tamil Nadu, inter-correlation, Anova & multiple regression analysis was used to analyse the data, the study observed that there is no significant relationship between the demographic variables pertaining to respondents and their satisfaction level except in case of income and marital status of the respondents were found to be significant.

Balaji and Suresh Babbu (2012) attempted to study the influence of demographic variables on the service quality in banking sector. The findings of the study revealed

that demographic variable like gender, no. of years being customer, educational background and income if the customers' influences the service quality of banks. This will help the banks to understand their customers and improve their service quality in a bargain to achieve customer satisfaction.

From the studies reviewed it can be said that demographic attributes of the customers of the banks does influence the satisfaction level based on the type of services offered by the service providers. Further it is observed that there is no one set of factors that are significant in affecting the satisfaction levels of the customers. It is observed that there are different attributes of demography affecting satisfaction of the customers based on the service provided by the banks for different categories of banks and operating in different regions having different set of socio-economic and cultural backgrounds.

3.6 Service quality and Performance of the banks

The performance of any business depends upon improved facilities or service to its end user. Providing high quality service shall allow service providers to differentiate themselves from their competitors and help in gaining sustainable competitive advantage in the global market (Gounaris, et al., 2003). The most important factor to gain sustainable competitive advantage is by providing best service quality which will result in improved customer satisfaction, customer retention, and profitability (Sureshchandar et al., 2002). Offering superior quality of service shall not only help business to satisfy their customers, but shall lead to customer loyalty and further this group of loyal customers will help the business to grow and reap higher profits. In the present study an attempt is made to find out cause and effect relationship between service quality and its impact on the performance of the banks with mediating effects on customer satisfaction and customer loyalty operating in various sectors. Many studies done by researchers in the past only judged the financial performance of banks across various sectors and have used various parameters to judge the performance of the banks both in India as well as abroad. The literature review pertaining to service quality and its impact on performance of banks is provided in the following paragraphs.

Parasuraman and Berry (1990) analyzed the impact of service quality on performance, the study advocated that company's providing excellent customer service, will result into customer satisfaction which in turn help to increase the customer's desire to use their services in the future, thus the revenue of the company is up and that the

beneficiary of such improved service offered shall willingly pay a premium price and to remain loyal with the service provider despite rise in the prices.

Leeds (1992) observed that better service quality and professional approach by the employees of the organisation resulted into higher customer satisfaction, helped in reducing customer erosion and lead to increasing the performance of the business.

Lewis (1993) observed that by providing superior service quality was one of the most important determinants in establishing competitive position in the market and also helped in improving the performance of the organisation in terms of higher profits.

Morrall (1994) analyzed the impact of better service quality on the performance of the banks, the study revealed that some of the banks in U.S.A which implemented better service quality to their customers had a substantial edge over their competitors and further it was also observed that the profits of these few banks were also noticeably improved.

Hall (1995) observed that banks in order to establish a competitive position in the market must measure and determine their level of service quality offered, if the banks desire to retain and satisfy their customers. In addition, it was also observed that the only means of measuring service of the banks was to ask the recipients of service. The study reinforced that the banks have to identify the service quality gaps and improve them from time to time, which will result in gaining a competitive edge to the banks.

Newman and Cowling (1996) measured the service quality offered by two British clearing retail banks, the findings of the study revealed that banks should have strategic interest in providing service quality since better service quality has connection between productivity, profitability as well as helps in reduction of cost in the case of retail banks.

Rapert and Wren (1998) evaluated the strategy of the institution based on service quality, the results of the study had a positive impact on operating income which was a short-term increase as well as there was a sharp increase in the growth of net revenues that would be sustainable in the near future. Further in the study it was also found that provision of quality service by the service provider had a direct impact on short term as well as long term performance of the organisational measurements.

Chang and Chen (1998) concluded that there is a positive relationship between service quality offered by the service provider and the profitability of the business. The Service providers should give service quality the highest priority, which will serve as an added advantage for securing medium and long term benefits for continuous improvements,

have premium prices for their services, enjoy higher customer value and lead the service organisation to achieve higher profits.

Mukherjee et al., (2003) found that the relationship between bank resources, service quality and their relative performance. The study recommended that the profit and loss sharing option of the bank is very attractive; as such it helps the banks to reduce their risk of future uncertainties and also help the banks in monitoring of costs.

Ghannadian and Goswami (2004) researched on Australian banks regarding the impact of better service quality on performance of the banks, the study revealed that satisfaction of the customers plays inter mediating role in determining the relationship between service quality offered by the banks and their relative financial performance.

Duncan and Elliot (2004) explored empirically the relationships between efficiency, financial performance and service quality offered to customers' among a cross-section of Australian banks, the results of study revealed that the financial performance of the banks have positive relationship with service quality scores of the customers.

Chang and San (2005) observed in the Taiwanese banks, that quality service rendered is considered to be an antecedent of customer satisfaction and simultaneously customer satisfaction is an antecedent of profitability of the banks, similar conclusion were drawn by Jham and Khan (2005); Al-Hawari and Ward (2006); Akroush (2008)

Karatepe et al., (2005) observed that if the customers of an organization are satisfied with the services rendered, this will result into loyal set of customers' and consequently organization may retain them, which is a positive aspect from the organization's point of view, which would result into higher profits, greater market share and help in increasing customer base of the banks.

Hussein and Jabnoun (2006) evaluated the relationship between service quality offered by financial institutions and their relative performance, the study revealed that financial institutions could improve their service quality to enhance their profitability, and further banks which enjoy high profits are left with more resources in hand to further improve their services and help in promoting the profits of the institution.

Mohammed Al Hawari (2006) investigated the relationship between perception of the customers pertaining to service quality and the financial performance bank in Australia, and also investigated the mediating role of customer satisfaction in that relationship, a total of 384 bank customers were taken for the study, statistical tool used was the structural equation model, the study revealed that satisfaction level of the

customer acts mediates the relationship between the constructs of service quality and the financial performance of the banks.

Chi and Gursoy (2009) investigated relationship between customer satisfaction and financial performance in hospitality industry, structural equation model (SEM) was used to test the hypothesis of the study, the study revealed that service providers should understand the cause and effect relationship between service quality and financial returns of the company, further a satisfied set of customers turn into a loyal customers and these customer, will lead the institution to have higher sales and benefit from higher financial returns for the company.

Moreover, researchers in the past like Heskett et al. (1997), Zeithaml et al. (2000) and Vimi and Mohd (2008) Fathoallah Zadeh et al., (2011), Mohammadi et al. (2012), Lombart, and Louis (2012), Qasemi and Khosravi (2014) were of the same opinion i.e. impact of rendering high level of service quality leads to customer satisfaction and indirectly lead to higher profits of the firms.

Ashfaq Ahmed et al., (2011) analysed the service quality offered by Islamic banks with mediating effects on satisfaction and performance of the banks, SEM technique and partial least square method were used, the study analyzed the views of 720 bank customers. The study identified that there is a significant impact of service quality on' satisfaction levels of the customers, further a major gap was identified between customer satisfaction and performance of the Islamic banks. Such a gap could be on account of lack of customer orientation and knowledge about various services offered by the banks. Moreover Islamic banks were concerned about expansion of their branch networking instead of orienting their customer. The results of the study clearly suggest that customer satisfaction does not act as a mediator between the constructs of service quality and financial performance of the banks under study.

Fatemeh Karimi et al., (2014) conducted a research study the cause and effect relationship between customer satisfaction, service quality and business performance which is based on the service profit chain model, a total sample of 1342 bank customers of bank Melli based in Iran were taken for the study, statistical tools used were SEM and factor analysis to draw useful conclusion. The study revealed that better service quality offered to the customers of the bank shall help in gaining customer satisfaction, further it was observed that customer satisfaction has a positive influence on customer loyalty of the banks and it is also evident from the study that customer loyalty indeed

had a positive & significant impact on the financial performance of the banks, this suggest that higher the level of loyalty of the customers, better would be the financial performance of the institutions.

Elissavet Keisidou et.al., (2015) attempted to study the cause and effect relationship between three constructs pertaining to customer satisfaction, loyalty and financial performance of banks operating in Greece, a total of 304 bank customers were selected for the study, statistical tools used were confirmatory factor analysis, correlation and structural equation model (SEM). The study revealed that functional quality had no impact on satisfaction where as relational quality was having positive significance, further it was observed that customer satisfaction had a positive effect on loyalty of the customers. As regards the financial performance of banks it observed that neither customer satisfaction nor customer loyalty have an effect on the profits of the bank which is contrary to the findings of previous studies by Hallowell, (1996); Bernhardt et al., (2000); Chi and Gursoy, (2009); Fathollahzadeh et al., (2011), this is due to the current financial turmoil in the banks in Greece suffering from huge financial losses.

Sajad Shah Hosseini and Behrooz Shahmoradi (2016) studied the interrelationship between customer loyalty, customer satisfaction and performance of Resalat banks, the study concluded that that there is a positive and significant relationship among the three constructs bank. The study also indicated that credit aspect of the bank had the most correlation whereas the economics had the least correlation with the financial performance of the bank. Thus it can be said that on account of increase in customers' satisfaction of Resalat bank, leads to improvement in their financial performance. This is due to the fact that the cost of keeping an existing customer is very less than absorbing a new one and further regular customer of the bank are significantly more profitable than the customers who visit the bank for one time.

Torabi Zahra and Mahmoudi Edris (2016) investigated the impact of service quality on the financial performance of the banks with mediating effects through customer satisfaction and loyalty, a total of 384 bank customers were selected for the study, confirmatory factor analysis and partial least square methods were used to analyze the data, the study revealed that services quality is positively correlated with financial performance of Keshavarzi banks and constructs of customer satisfaction and loyalty are effective in relation between services quality and their financial performance. Further it can be said that effective promotion of the customer satisfaction and loyalty,

can help to increase in services quality recovery which will result in effectiveness of financial performance of Keshavarzi banks. It was suggested that banks should have information about tastes, habits, income and general attributes of their customer, thus services provided to their shall be closer to customers' demand and expectation, leading to customer satisfaction and loyalty will increase, resulting in better financial performance.

Meshach G Goyit and Teresa M Nmadu (2016) evaluated the effect of service quality on the financial performance of banks in Nigeria, ordinary list square (OLS) regression was used to analyze the dataset, the study revealed that there was no significant impact of volume of deposit and investments made in service quality in Nigerian banks, further there was no significant relationship between investments in service quality and volume of turnover of banks and finally it was also observed that there was no relationship between investments of the banks' in service quality and profitability of the banks in Nigeria. The study throws light on the fact that absence of relationship between improvements in service quality and profitability is not showing improvements in the banking services provided that would attract the attention of customers. Thus the paper concluded that for banks to achieve repeat purchase by the customers, should organize their operations according to the needs and requirements expressed by their customers.

Mbama and Cajetan (2018) investigated the relationship among four constructs of customer experience, customer satisfaction, customer loyalty and financial performance of banks in United Kingdom; statistical tools used for the study were multivariate factor analysis, structural equation modeling (SEM) and Anova test. The study revealed that there is significant relationship between customer loyalty and financial performance whereas no significant relationship was observed between customer experience and customer satisfaction with financial performance of the banks.

Thus, on the basis of above literature reviewed in India and abroad, there is a need to measure the impact of service quality provided by the banks on business performance with mediating effects on customer loyalty and customer satisfaction in the present era of stiff competition.

Customer satisfaction in recent times is considered as a driver for achieving organizational performance especially in the banking sector on account of ever increasing competition. Several studies in the past have measured the relationship between customer satisfaction and performance of the firms (Anderson et al., 1994; Al-

Hawari and Warid, 2006). However, it is observed that there is a severe shortage of literature that specifically considers the measurement of the performance of banks with reference to their service quality and customer satisfaction. From the studies done in the past, it is observed that a significant relationship co exists between service quality offered by the banks with their financial performance (Duncan and Elliot, 2002) whereas some studies indicate no significant relationship among these two constructs. Thus it can be concluded that superior delivery of services may or may not results in achieving profitability of the institution.

Thus service quality and customer satisfaction must be taken into consideration while developing marketing tools and strategies. Providing superior service quality and satisfaction are the main attributes contributing to retaining customers and attract new ones that help in increasing the profits of the financial institutions.

Many studies done in India and abroad have shown clear indication of links between better service quality, customer satisfaction and profitability. Thus in order to meet the ever increasing demands of the consumers, service providers needs to understand their requirements and aspirations to serve them better. Providing of quality service can lead to greater market share and good returns (Slu & and Mou 2003). Today due to high market competition service quality becomes an increasingly important issue in the field of competitive market.

3.7 Research Gaps

In the service industry consumers are becoming increasingly important and are indispensible and expect superior service. From this point of view of consumers a service is considered to be the crucial aspect in deciding the future of the organisation, thus delivering superior service is an ongoing concern for the managers. If service providers do not offer quality customer service; they won't be able to meet the expectations of consumers, resulting in difficulty to sustain and survive in the competitive environment. Banking industry has witnessed significant changes over few decades in terms of new products and services and customer friendly technology. These changes have effects on banking relationships and its performance, which cannot be undermined and need to be researched thoroughly.

From the various studies listed above the following research gaps were identified:

The aforesaid review of literature carried out from various angles and perspectives of service quality, customer satisfaction, customer loyalty and financial performance of banks across the globe with its effects on and together has been studied extensively. In the same manner, some researchers have focussed on measuring the influence of service quality on satisfaction levels of the customer as well as loyalty. Further most of the studies were limited to either one or two aspects of banking.

- Majority of the studies done have concentrated on measuring the effect of service quality on satisfaction level of the customers or their loyalty. The studies were limited to one aspect related to banks operating in different sectors.
- Studies on service quality done in the past have compared among public, private and foreign banks, no much studies are done to compare service quality offered by public, private and cooperative banks in India.
- Very few studies are done in the past, whereby a comparison is done between service quality offered by banks with their financial performance across various sectors.
- Majority of the studies undertaken have analysed five dimensions of service quality using the 22 items of servqual model, but there is scope to add more items considering other factors that are important to assess the effect of quality services offered by the banks with respect customer satisfaction and customer loyalty.
- Very few studies were done in the past to test the effect of superior quality service offered to customers to assess their satisfaction and loyalty and further its effect on the banks profit, similar studies are done in other business to know the cause and effect relationship with the help of service profit chain model.

Thus the proposed study aims to fill the above research gaps by analyzing the impact of service quality gaps of the banks operating in various sectors on the satisfaction level of the customers as well as customer loyalty. This study also examines the impact of service quality of the banks on the financial performance with intermediating effects on customer satisfaction and customer loyalty of the banks operating in public, private and multi-state cooperative sector.

Chapter Four
Research Methodology

This chapter discusses the research methodology of the thesis which includes rationale of the study, research questions, objectives of the study, hypotheses, scale development process, tools for data collection data collection methods, sample design, sample size, , validity and reliability of scale, structural equation model, statistical tools used for quantitative and qualitative analysis.

4.1 Introduction

This study is undertaken to assess the quality of service prevailing among banks operating in different sectors within the banking industry in India. The post LPG period witnessed considerable changes in the overall operations and functioning of the banks in India. With increased competition from various sectors, banks are forced to introduce innovative products and services to attract and induce the customers. With the introduction of information technology platform, banks today are witnessing constant changes and up gradation in the services offered to their end users, with an intention to facilitate them in a better way. Nowadays it is observed that the new private sector banks and foreign banks are offering a wide range of new products and services as compared to public sector banks on account of which they are witnessing stiff competition from them. Against this background judging the financial performance of these banks becomes essential to know their current standing. To judge the performance of the banks operating in various sectors, five banks from different banking sectors have been selected for the study. The study is descriptive as well as empirical in nature, wherein both primary and secondary data have been used to address the objectives finalized for the research. The study is an attempt to examine the impact of service quality offered by the banks on its customers and analyse its impact on the financial performance of the select banks in India with intermediating effects on customer satisfaction and customer loyalty.

4.2 Rationale of the study

The process of liberalization in India began way back in 1991, followed by financial reforms in various sectors of our economy, as a result of which the banking sector

witnessed significant changes. Further, the entry of private and foreign banks, lead to stiff competition in this sector. The focus of the reforms was to improve the profitability of the commercial banks. Banks today are facing challenges due to intense competition, changing market dynamics, risk, uncertainty and ever changing demands of the customers. Thus in order to develop marketing strategy, it is essential that the marketers of banking service need to understand the service attributes that are used by consumers in selecting banks and the banking products. If marketers can understand these attributes they will be in a better position to manage and influence the customers.

Today the type of service provided by the service provider and the perception level of the customers across the globe is highly debated and researched topics in the area of service marketing. The type of service provided by the service organizations is of utmost importance in the service sector, with its emphasis on service quality. Offering superior quality service is one such strategy being used by service providers to obtain a better position and place them effectively in the market. The problem most of the organizations face is a systematic way of evaluating and monitoring the level of service quality offered to the customers and therefore a gap exists between what customers expect and what they perceive through service interaction. Service quality and customer satisfaction are recognised as the two basic concepts which are considered to be the crux of the marketing theory and practice (Spreng & Mackoy 1996). Therefore, the study is of immense significance for the banking industry in general and bank's management, investors and clients in particular. Thus the study mainly focuses on measuring the service quality provided by the banks, determine its impact on the financial performance of the banks, with intermediating effects of customer satisfaction and customer loyalty and further investigate whether these factors lead to improved financial performance of the banks.

4.3 Scope of the study

The scope of the study is limited to selected public sector banks, private sector banks and multistate (scheduled) cooperative banks. The present study seeks to look into the empirical insights about customers' expectations and perceptions of service quality in the banking industry. In particular, this research will identify the service quality dimensions and understand how these dimensions contribute or influence towards

customer satisfaction and loyalty which will directly or indirectly help in improving the financial performance of the banks. Further this study investigates how the banks perform on various service quality dimensions and which dimension is more significant in achieving customer satisfaction and loyalty. In addition to this, service quality and satisfaction of the customers will be compared based on demographic factors, such as gender, age, income, education and profession and also identify the satisfaction level of the customers towards specific services offered by the banks.

This research study analyzes whether a gap exists between customers' service expectations and perceptions of actual service delivered by the banks, which will help the management to identify deficiencies in their services rendered and areas of dissatisfaction, with opportunities to improve the service quality of the organisation. Further the study also intends to analyze the relationship between service quality outcomes on customer satisfaction and customer loyalty and whether such increased or decreased level of satisfaction and loyalty reflect in terms of better financial performance of the banks across various sectors.

4.4 Research Questions

This research seeks to answer the following questions:

- Whether gap exists between expected service quality and perceived service quality among public, private and multi-state cooperative sectors?
- Is there any significant difference in the services offered by public, private and multi-state cooperative banks?
- Whether there is any significant relationship between service quality offered by the banks operating in various sectors and customer satisfaction?
- Which dimensions of service quality are most significant towards customer satisfaction in case of public, private and multi-state cooperative sector banks?
- Which dimensions of service quality are most significant towards customer loyalty in case of public, private and multi-state cooperative sector banks?
- Does the service quality offered by public, private and multistate cooperative banks have any significant association with demographic variables of the customers towards their satisfaction?
- Whether there is any significant difference in the financial performance of public, private and multi state cooperative banks?

- Whether there is a significant impact of service quality offered by public, private and multi state cooperative banks on the financial performance with intermediating effects on customer satisfaction and customer loyalty?

4.5 Objectives of the Study

The overall purpose of the study is to evaluate the expectation of the customers and also their perception towards service quality offered by the banks and also to examine the effect of service quality on the customer satisfaction and customer loyalty vis a vis financial performance of banks operating in various sectors. However specific objectives of the research are as follows:

1) To explore the opinion of the customers of public, private and multi-state cooperative banks in relation to services offered, expectation and perception level of the customers towards service quality and to identify service quality gaps.
2) To evaluate the relationship between dimensions of service quality with satisfaction level of the customers and customer loyalty pertaining to public, private and multi-state cooperative banks and identify the most important dimensions of service quality.
3) To analyze the effect of demographic variables on the satisfaction level of the customers of public, private and multi-state cooperative banks.
4) To examine the relationship between service quality with the financial performance of public, private and multi-state cooperative banks vis-à-vis customer satisfaction and customer loyalty.

4.6 Hypotheses of the research

This research study began by undertaking the following hypotheses

H1→ There is significant difference in the service quality expectation and perception level of the customers of public, private and multi state cooperative banks.

H2→ There is significant difference in the customer satisfaction pertaining to various services offered by public, private and multi state cooperative banks.

H3→ The dimensions of service quality have a significant relationship with customer satisfaction in case of public, private and multi state cooperative banks.

H4→ The dimensions of service quality have a significant relationship with customer satisfaction in case of public, private and multi state cooperative banks.

H5→ There is a significant association between demographic variables and customer's satisfaction in case of public private and multi state cooperative banks.

H6→ There is a significant difference in the financial performance indicators in respect of public, private and multi state cooperative banks.

H7→ There is a significant relationship between bank performance indicators with return on asset (ROA) in case of public, private and multi state cooperative banks.

H8→ There is a significant relationship between the constructs of service quality, customer satisfaction, customer loyalty and financial performance in case of public, private and multi state cooperative banks.

4.7 Data collection methods and Data Sources

The study is based on both primary and as well as secondary sources of data.

To collect the primary data for the study on service quality in the banking sector, a survey was conducted during the months of February 2018 to December 2018. The survey was conducted with the help of predesigned questionnaire to examine the effect of service quality offered by the banks, on the satisfaction level of the customer and customer loyalty, a modified SERVQUAL scale relevant to the banking industry was prepared. The questionnaire consists of the SERVQUAL instrument developed and updated by Parasuraman et al. (1994), three dimensions and few statements were added based on literature review done, the dimensions include tangibility, reliability, responsiveness, assurance, empathy, after sales service, physical facilities and modern services were taken, finally six dimensions and 35 statements were considered for the study. Besides the dimensions of service quality two additional outcomes of service quality were included viz. Customer satisfaction and customer loyalty, which were derived by going through the literature conducted in the banking sector, personal interviews with academicians, managers and customers of various sectors of banks.

The respondents were asked to evaluate their level of satisfaction on both expectation as well as their perception level. Further, for the service quality outcomes i.e. customer satisfaction and customer's loyalty, 10 items were asked and only the perception level of the respondents was taken into account, since both these aspects occur after the

service is rendered/delivered. All the items were measured on Likert's five-point scale, the scale ranged from 5 (strongly agree) to 1 (strongly disagree). Apart from service quality, questions regarding rating of various services of the banks, rating the overall service quality and number of years as customer of the bank were also included in the questionnaire.

The scores obtained through Likert's scale were classified into five groups, viz., 'strongly disagree' (1), 'disagree' (2), 'uncertain' (3), 'agree' (4) and 'strongly agree' (5)

In order to determine the dimensions of service quality factor analysis was done. To check the reliability of the questionnaire Cronbach alpha was calculated. Statistical techniques such as paired sample t test, Anova test, chi square test, correlation analysis, multiple regression analysis, Structural Equation Modeling (SEM) were applied to arrive at the results, test hypotheses and draw necessary inferences.

4.7.1 Sample Design

The data required for the study was collected from both primary as well as secondary sources. The secondary data was mobilized from the financial statements/ annual reports of the banking companies for 10 years, during the period 2007-08 to 2016-17. The study was narrowed down to 15 banking companies operating in India (5 banks each operating in public, private and multi-state cooperative sector). Convenience sampling method was used to collect the primary data for the study. A sample of 1200 respondents (400 respondents per sector) was planned to be taken for the study with the help of pre-designed questionnaire based upon the Servqual model developed by Parasuraman et al., (1988). However, for this study the model developed by Parsuraman et.al was revised and one additional dimension was added to the questionnaire considering modern services offered to the customers by the selected banks. This new dimension was added based on the outcome of the pilot study done. Besides the six dimensions of service quality, opinions of the customers were also sought with regard to customer satisfaction and customer loyalty. Few questionnaires were personally administered and the remaining information was collected through online method (Google forms) from the customers of respective banks.

4.7.2 Sample Size

After determining sample design for the study, the next step was to determine the appropriate sample size. Based upon literature review done extensively, the sample size for the study for unknown population was determined based on Cochran's formula, which is given below:

The Cochran's formula to calculate the sample size for infinite/unknown population:

$= (\text{Z-score})^2 * p*(1-p) / (\text{margin of error})^2$

$= (1.96)^2 * 0.5*(1-0.5) / (0.05)^2$

=3.8416 * 0, 25 / 0.0025

= 384.16

=384

(The Z-score is 1.96 for a 95% confidence level)

Thus a minimum of 384 respondents were to be collected for each public, private and multi-state cooperative banks. Thus a total of 1229 responses were collected from the various states of the country by personally administrating the questionnaires and also through Google forms. The customers of the banks were chosen by using Convenience Sampling Method while collecting responses by personally administering the questionnaires. Thus the total sample collected for the study, sector wise is as follows:

a) Public sector banks → 409 respondents

b) Private sector banks → 411 respondents

c) Multi-State cooperative sector banks → 409 respondents

Total → 1229 respondents

4.7.3 Period of Study

This research study includes collection of data both from primary as well as secondary sources. The primary data comprised of collecting the opinion of the customers on service quality, customer satisfaction and customer loyalty pertaining to three sectors of bank across various states of India. The period for collection of primary data was done

between the periods Feb 2018 to November 2018. For collection of secondary data, financial statements from the respective bank websites plus the Reserve Bank of India website were downloaded to gather required financial data pertaining to various performance and financial indicators of 15 banks, the period of was 10 years commencing from financial year 2007-08 to 2016-17.

4.7.4 Banks selected for the study

For gauging the quality of service offered by the banks and to see the impact on customer satisfaction of the banks, primary data was collected from customers of various categories of banks. A sample of respondents of all the three sectors of banks was selected on the basis of convenience sampling from various states of India. The selection of the banks was done on the basis of top banks operating in public and private sector, whereas in case of multi-state cooperative banks the selection was based keeping in view the concentration of the banks in different areas, number of years of service offered, number branches spread across various states, latest banking products and services offered by these banks, as well as the paucity of time and financial resources of the researcher. A total of 15 banks (five banks each) operating in public, private and multi-state cooperative sectors was finalized for the study.

4.7.5 Bank Profile:

4.7.5.1 Public sector banks

Bank Details	State Bank of India	Bank of Baroda	Punjab National Bank	Canara Bank	IDBI Bank
Year of establishment	1 July 1955	20th July 1908	19 May 1894	July 1906	1st July1964
No. of branches	1,12,743	5,538	6,937	6,083	1916
No. of employees	2,78,872	52,420	68,290	55,717	27570

Branches in India and Overseas	Covering all states in India & 22 branches world wide	Covering all states in India and 24 branches world wide	Covering all states in India & having 9 branches world wide	Covering all states in India and having 8 branches world wide	Covering all states in India and having two branches world wide
Services/products offered	Consumer, Corporate Banking, Insurance, Investment Banking, Loans, Private Equity, Securities, Asset Mgt, Wealth Mgt.	Consumer, Corporate Banking, Insurance, Investment Banking, Loans, Private Equity, Wealth Mgt, financial inclusion	Consumer, Corporate Banking Insurance, Investment Banking, Loans, Private Equity, Wealth Mgt, financial inclusion	Consumer, Corporate Banking, Insurance, Investment Banking, Loans, MSME banking Private Equity, Wealth Mgt	Consumer, Corporate Banking, Insurance, Investment Banking, Loans, Agriculture loan, banking, NRI banking, PPF, Sukanya samriddhi a/c
Modern products/services	Yono SBI, ATM, cash deposit, Credit & debit cards card, NEFT/RTGS, E-cheque, Demat, broking services, E-pay, Door	ATM, Cash deposit, Credit & debit cards card, NEFT/RTGS, E-cheque, Demat, Bharat bill pay, E-	Credit & debit cards card, NEFT/ RTGS, E-cheque, Demat, Cash deposit, pass book printing, E-statements, door step banking	Credit & debit cards card, Cash deposit, pass book printing NEFT/RTGS, E-cheque, Demat. Bharat bill pay, Rupay etc	Credit & debit cards card, ATM, NEFT/RTGS, E-cheque, Demat, E-fund transfer, Insta pay, Bharat bill, pay, income tax payment, online

	Step Bank, domestic treasury etc.	lobby, cash recyclers, m-passbook, m-investment, internet payment gateway etc.	services, SMS banking, BHIM app etc.		donation, pay app mobile wallet etc.

(Source: Authors compilation)

4.7.5.2 Private sector banks

Bank Details	**HDFC bank**	**ICICI bank**	**Kotak Mahindra bank**	**Axis bank**	**IndusInd bank**
Year of establishment	August 1994	June 1994	Feb 2003	1993	1994
No. of branches	4,963	4867	1,391	3,703	1,400
No. of employees	84,325	84140	33,013	59,600	25,314
Branches in India and Overseas	Covering 29 states in India and 3 overseas branches	Covering 29 states in India and 12 overseas branches	Covering 29 states in India and one overseas branches	Covering 29 states in India and 5 overseas branches	Covering 29 states in India and 3 overseas branches

Services/Products offered	Banking, Investment, Deposits Insurance, Premium Banking, Mutual funds Mortgaged, Agriculture loans, pension accounts, capital markets	Consumer Banking, Corporate Banking, Insurance, Investment, Mortgage Loans, Wealth Management, PPF, NPS, mutual funds	deposits loans, Insurance, NPS, Mutual funds, Demat, Portfolio mgt service, NRE accounts	Consumer Banking, Investment, Mortgage Loans, Wealth Management, Insurance, agricultural loans	Savings, deposits, loan facility, Insurance, Demat, MF, NPS, Forex, online &
Modern services/ products	Credit & debit cards, ATM, Demat, forex, Bhim app, NEFT/ RTGS online transfer, NRE account, e-gift plus card, e-fund transfers, etc.	Credit & debit cards, Demat, ATM , Forex, NEFT/ RTGS Online banking, UPI app, Easy pay, Digital wallets, GST, e-ticket booking, e-invoice, online recharge, easy pay etc	Credit & debit cards ATM, NEFT/ RTGS, money transfers, e-wallets, e-recharges, e-tax payment, NRI banking, 24*7 phone banking etc.	Credit & debit cards, cash deposit machine, ATM, NEFT/ RTGS, forex, mutual funds, internet & mobile banking, door step banking, Axis paygo, Bhim app, e-payments UPI,SMS banking etc	Credit & debit cards ATM, NEFT/ RTGS forex, mutual funds, internet & mobile banking, , Bhim app, e-payments UPI,SMS banking etc

(Source: Authors compilation)

4.7.5.3 Multistate cooperative banks:

Bank Details	**Saraswat coop bank**	**Cosmos co-op bank Ltd**	**PMC bank**	**TJSB bank**	**NKGSB bank**
Year of establishment	14th Sept 1918	18th Jan 1906	13th Feb 1984	1972	26th Sept 1917

No. of years of service	100 yrs	113 years	34 yrs	46 yrs	101 yrs
No. of branches	283	140	120	120	105
No. of employees	4061	2,800	1781	1304	1157
States covered	Maharashtra, Gujarat, MP, Karnataka, Goa and Delhi.	Maharashtra, Gujarat, MP, Karnataka, AP, Telangana and Tamil Nadu	Maharashtra, Delhi, Karnataka, Goa, Gujarat, AP &MP.	Maharashtra, Gujarat, Goa and Karnataka	Maharashtra, Karnataka, Goa, Gujarat and union territories of Daman Diu, Dadra Nagar Haveli
Services/products offered	Savings, deposits, Insurance, NRI deposits remittances services, Overseas accounts, insurance, mutual fund	Insurance, MSEB Bill Payment Facility, Safe Deposit Vaults, Mutual Fund Service, Visa Insurance service, Pan Card services	8 to 8 banking, any branch banking, Insurance, mutual funds, franking facility, locker facility	Insurance, loans, deposits, retail and commercial loans, SME loan, E-pass book, NRI accounts,	Ancillary business, remittances, Insurance, loans, deposits
Modern services	SMS banking, mobile banking, NEFT, RTGS, Cash pickups, UPI NETC Insta pay, Bharat bill pay etc.	Debit/credit card, ATM, Mobile banking, Demat, Debit card, credit card, ECS, NEFT/RTGS, internet banking, SMS services etc	12 hours service 360days banking, ATM, credit, debit cards, E-payment of taxes, SMS/mobile banking, internet banking, NETC, Fastag etc.	Forex, travel loan, mobile banking, EFT, Banc assurance Product, 24 x 7 Cheque Depository, E-Lobby outlets, SMS, Tranzapp RTDS and Core banking etc.	NEFT/RTGS, ECS, NRI services, forex, SMS & internet banking, Pension a/c Demat services, quick mobile, quick ATM, UPI services etc.

(Source: Authors compilation)

4.8 Tools for data collection

Primary data:

The primary data for the study was collected from the respondents by administering structured, pre-tested questionnaires through personal interview method.

Here the investigator followed a rigid procedure and sought answers from the respondents with the help of a pre designed questionnaire. Under this method, data collection is usually carried out in a structured way, wherein the output depends on the ability of the interviewer and the respondents to a larger extent.

Mailing of questionnaires (Google forms): The researcher initially collected email addresses of the respondents through social networking/personal contacts and accordingly Google forms were sent through a link and were requested to send the form after duly filling up the same. The required information pertaining to banks service quality, the level of satisfaction and customer loyalty information was gathered from various bank customers residing in different states of India through pre designed schedules. Convenience sampling method was used to collect responses from the respondents residing in various parts of India. In total 1281 respondents of public, private and multi state cooperative banks operating in various cities were contacted personally and through emails and Google forms, out of which 1229 questionnaires were complete in all respects and were considered for the study.

Secondary data:

The secondary data includes information pertaining to financial data collected from published financial statements of the banks under study and literature pertaining to banks were collected from books, articles, journals, bulletins, magazines and specialized banking periodicals and various websites. The information collected formed the basis for building up theoretical and conceptual framework for the study.

4.9 Ratios for measuring financial performance of banks

Sr. No	Code	Description	Formula
1	CAR	Capital adequacy ratio	(Tier-I + Tier-II + Tier-III)/RWA

			(Risk weighted average)
4	TA/TA	Total advance to total assets	Total Advance /total assets
3	PPE	Profit per employee	Profit after Tax (PAT) / Total number of employees
4	II/TI	Interest income to total income	Interest income / total income
5	NIM	Net Interest Margin	(Interest Income – Interest Expense)/Total assets
6	ROA	Return on Total Assets	Profit After Tax/Total Assets
7	NPA	Percentage of Net NPA's	
8	CD ratio	Credit deposit ratio	Loans and advances/Deposits
9	ID ratio	Investment deposit ratio	Investments/Deposits

4.10 Tools for data analysis

The following tools/method/techniques were used objective wise for analyzing the data of the research study which are mentioned in the following paras:

Objective 1:

To explore the opinion of the customers of public, private and multi-state cooperative banks in relation to services offered, expectation and perception level of the customers towards service quality and to identify service quality gaps.

Techniques used: Initially KMO Bartlett test of spherecity is done to see whether the data is suitable for factor analysis. Exploratory factor analysis is done to identify various factors from the data collected through survey on the customers of the banks. For testing the reliability of the data Cronbach Alpha is calculated on all the dimensions

of service quality. Descriptive statistics is used to identify service quality gaps across all three sectors of banks and Paired sample t-test is used to identify significant differences in the expectation and perception level of customers on all dimensions of service quality pertaining to public, private and cooperative banks. Further one way ANOVA is used to analyze the variations in the services offered by public, private and multi-state cooperative banks.

Objective 2:

To evaluate the relationship between dimensions of service quality with satisfaction level of the customers and customer loyalty pertaining to public, private and multi-state cooperative banks and identify the most important dimensions of service quality.

Techniques used: To analyze the impact of service quality dimensions on the satisfaction level of customers and customer loyalty, correlation analysis and multiple regression analysis is done sector wise, to test the significance of customers across various sectors of banks and also to identify the most important dimensions of service quality pertaining to customer satisfaction and customer loyalty in case of public, private and multi-state cooperative banks.

Objective 3:

To analyze the effect of demographic variables on the satisfaction level of the customers of public, private and multi-state cooperative banks

Techniques used: To study the influence of demographic variables as regards satisfaction level of the customers, one way ANOVA test is used to know and understand whether there is any significant relationship between the demographic variables and customer satisfaction in case of different sectors of banks.

Objective 4:

To examine the relationship between service quality with the financial performance of public, private and multi-state cooperative banks vis-à-vis customer satisfaction and customer loyalty.

Techniques used: Initially confirmatory factor analysis was done to confirm the factors extracted as per exploratory factor analysis results. Descriptive statistics is used to test the performance indicators used for the study, correlation analysis, multiple regression analysis and Anova is done sector wise to identify the correlations among the variables, determine the factors that lead to profitability of banks operating in various sectors and significance of the model, later Structural Equation Modeling (SEM) is done to analyze the relationship across four constructs viz. Service quality, customer satisfaction, customer loyalty and financial performance of banks operating in public, private and multi-state cooperative sector.

4.11 Scale Validation

Exploratory Factor Analysis (EFA)

Exploratory factor analysis is a statistical technique used to reduce data to a smaller set of summary variables which helps in exploring the underlying theoretical structure of the phenomenon. Such analysis is used to identify the relationship between the variables and the respondent. It is a multivariate statistical technique used to uncover the structure for a relatively larger set of variables in the dataset. It is a technique within factor analysis whose ultimate goal is to identify the underlying relationships between measured variables.

Confirmatory Factor Analysis (CFA)

Confirmatory factor analysis is a statistical technique used by the researchers to verify the factor structure of observed variables. Further it allows testing the hypothesis that a relationship between observed variables and their underlying latent constructs exists. After purifying the scale items using EFA and reliability analysis, the final factors that emerged from EFA should be confirmed through CFA. Finally to refine the measures of CFA, measurement models were estimated by using maximum likelihood estimation method.

4.12 Techniques for Analysis

For achieving the objectives of the research both primary and secondary data was collected and analysed with the help of following techniques to arrive at necessary conclusion.

4.12.1 Descriptive Statistics

It is a brief description of coefficients that summarizes data sets, which can represent the entire or a sample of the given population. Such statistics are broken down into measures like central tendency and measures of variability. The measures of central tendency basically include mean, median, and mode, whereas the measures of variability of the data include measures like standard deviation, variance, minimum and maximum variables, kurtosis and skewness.

4.12.2 Paired Sample t-test

The paired samples t test is a parametric test which helps to compare the means of two sets that relates to same individual, object, or related units. These two means typically represent two different times or two different but are related conditions or units. The purpose of running this test is to determine whether there is any statistical evidence that the mean difference between paired observations of a particular outcome is significantly different from zero. Such test can only compare the means of two or related units on a continuous outcome which is normally distributed.

4.12.3 One way ANOVA

One-way ANOVA is used to determine whether there is any statistically significant difference between the means of two or more independent items or group of items. It is an omnibus test statistic and cannot tell you which specific groups were statistically different from one another; this test tells you that at least two groups were different.

4.12.4 Multiple regressions

Regression analysis is a set of statistical processes used to estimate the relationships among variables, further multiple regression analysis is used to predict the value of a variable (Dependent) based on the value of two or more other variables (Independent) and is an extension of simple linear regression. This technique helps in determining the overall fit of the model and also helps in determining the relative contribution of each of the predictors as regards total variance explained in the model.

4.12.5 Correlation analysis

A correlation analysis shows the correlation coefficients between all the possible pairs of values and is a powerful tool to summarize large data sets. It is used to identify and visualize patterns in the dataset and used to investigate the dependence between multiple variables. Under this technique each cell in the matrix table show the correlation between the two variables and is used to summarize data and as an input for advanced analysis like multiple regression models.

4.12.6 Structural Equation Modeling (SEM)

A Structural equation model often involves both, the measurement as well as the structural theory. It is a multivariate statistical analysis which is used to analyze structural relationships among the constructs. This technique is the combination of factor analysis and regression analysis which helps to showcase structural relationship between measured variables and latent constructs. Under this method two types of endogenous variables and exogenous variables are used. This method estimates the multiple and interrelated dependence in a single analysis.

- **Goodness of Fit Indices**

Goodness of fit measurement model is required before interpreting the casual paths of the structural model; it refers to the ability of the model to reproduce the data. A model with a good fit is one that is reasonably consistent with the data and does not require re-specification. The measurement model's validity depends on the goodness of fit, which indicates how well the specified model produces the covariance matrix among the various items in the model. Thus the goodness of fit can be measured in following ways:

- **Absolute Fit Measures**

The absolute fit indices determine how well the model fits the sample data and also demonstrates which model proposed has the superior fit. This measure basically indicates how well the proposed theory fits the data collected for the study. This category includes model fits like Chi-Square test, RMSEA, GFI, AGFI, NFI and CFI.

- **Chi-square statistics**

The Chi-Square test is the traditional measure for evaluating the overall model fit and also to assess the magnitude of discrepancy between the sample and covariance matrices of fit (Hu and Bentler, 1999). It is regarded as the fundamental measure which is used to quantify the difference between observed and estimated covariance matrices.

- **Goodness-of-fit Index (GFI)**

This index calculates the amount of variance accounted for by the estimated population covariance and the statistic ranges from 0 to 1. If degree of freedom is large in comparison to sample size, the GFI has a downward bias. Further it has also been found that GFI increases if the parameters increases (MacCallum et al., 1999) and has an upward bias with large samples (Miles & Shevlin, 1998). The ideal fit of GFI should have a cut-off point of 0.90.

- **Adjusted GFI (AGFI)**

The AGFI index adjusts the GFI based upon degrees of freedom, with more saturated models reducing the fit. This fit tends to increase with the increase in the sample size. As with the GFI, values for the AGFI also range between 0 and 1 and generally the value of 0.90 or greater indicates a good fit model.

- **Root Mean Square Error of Approximation (RMSEA)**

The RMSEA was first developed by Steiger (1990) which tells how well the model is with the unknown but optimally chosen parameter, the estimates would fit the population covariance matrix. The RMSEA value between the range of 0.08 to 0.10 provides a mediocre fit and below 0.08 shows a good fit (MacCallum et al., 1999). However, more recently, a cut off value close to 0.06 (Hu and Bentler, 1999) or a stringent upper limit of 0.07 seems to be the general consensus among various authorities in this area.

- **Normed Fit Index (NFI)**

This statistic assesses the model by comparing the two values of the model with two null models. The values for said statistic range between 0 and 1. Bentler & Bonnet

(1980) recommended values greater than 0.90 indicating a good fit. Recent suggestions state that the cut off criteria for NFI should be .95 (Hu & Bentler, 1999)

- **Comparative Fit Index (CFI)**

CFI is a revised form of NFI which takes into consideration the sample size (Byrne, 1998), this fit index performs well even if the sample size is small. This statistic assumes that all the latent variables in the model are not correlated and it compares the sample covariance with the null model. Initially a cut-off criterion of CFI 0.90 was recommended, however recent studies suggest a value greater than 0.90 is required to ensure that mis specified models are not accepted (Hu & Bentler, 1999). Presently a CFI value of 0.95 is recognized as a good fit (Hu & Bentler, 1999).

4.13 Reliability Analysis

Internal consistency reliability: It refers to the extent to which items correlate with one another. It implies that multiple items measure the same construct, and correlate with each another. The commonly accepted measure of internal consistency reliability is Cronbach's coefficient alpha. The value of an alpha of 0.60 is the minimum acceptable standard for demonstrating internal consistency (Gerrard and Cunningham, 2004).

Validity Criterion

Face/content validity: The content/face validity of the construct was assessed through review of literature and discussions with the subject experts, and managers of different banks.

Convergent validity: Convergent validity refers to the extent to which the measures correlate with other measures that were designed to measure the same thing. High correlations indicate that the scale is measuring its concept (Hair et al., 2009). It can be measured in the following ways:-

Factor loadings: Factor loadings for SEM should be above 0.50 or ideally 0.70 or higher, indicate level of convergence.

Average Variance extracted: In CFA, the average variance extracted (AVE) is a summary indicator of convergence. The AVE is calculated by using standardized loadings, which is given as below:

AVE = Sum of Squared Standardized Factor Loadings / Number of Items

If AVE comes above 0.50, convergent validity gets established.

Discriminant Validity: Discriminant validity refers to the extent to which the measures differ from other measures designed to measure different concepts. It can be examined by evaluating the average variance extracted (AVE). Here the variance extracted for each construct should be greater than squared correlations between constructs Fornell and Larcker (1981)

4.14 Scale development

In order to have a thorough understanding of the influence of service quality on customer satisfaction and loyalty of the banks, both qualitative and quantitative research approach were applied. Initially the servqual scale developed by Parsuraman et.al was considered which have 5 dimensions i.e. reliability, responsiveness, reliability, empathy and assurance and 22 statements, further to have an indepth understanding pertaining service quality 3 dimensions pertaining to after sales service, physical facilities and modern services and few statements were added. For the exploratory qualitative study, the researcher identified 6 experts from various fields. Based on the inputs of the experts and exploratory factor analysis, the questionnaire was designed which lead to identifying seven dimensions of service quality with 35 statements and 10 statements pertaining to customer satisfaction and customer loyalty were finalised for the study.

4.15 Inter rater and Content Validity

For validating the revised questionnaire which was based on Servqual model by Parsuraman et.al, was designed to study service quality, customer satisfaction and customer loyalty relating to banks under study, six experts were identified and requested to categorize each items of the questionnaire for the content validity; the experts selected were chartered accountant, bank manager, bank personnel and experts from the academia. The Experts were requested to review the statements based on relevance,

clarity and simplicity of the content in each of the six dimensions of service quality viz. Tangibility, reliability, responsiveness, assurance, empathy and modern services. In the rating sheet the experts were required to indicate the following for all the scale dimensions.

The description of the rating scale is as follows:

Relevance	**Clarity**	**Simplicity**
1.Not relevant	1.Not relevant	1.Not relevant
2.Items need some revision	2.Items need some revision	2.Items need some revision
3.Relevant but needs some minor revision	3.Relevant but needs some minor revision	3.Relevant but needs some minor revision
4.Very relevant	4.Very relevant	4.Very relevant

Each rating was then scrutinized and statements were revised if they scored low on clarity and simplicity. Content validity depends on the expertise and judgement of the experts (Kimberlin & Winterstein, 2008). The ICVI values <0.80 were justified if experts are more than 2 (Polit & Beck, 2006). Statements were removed from the questionnaire if an item lacked relevance, clarity and simplicity. Accordingly some statements were removed from the questionnaire were S-CVI/Avg >0.80. After conducting a series of rounds of tests and seeking opinion from the experts, scrutinizing each question, the scale was subjected to reduction and refinement. Some questions were simplified and wherever necessary the statements were re-worded and made simple for the understanding of the respondents. As per the suggestions ‘double-barrel’ questions and statements which were negative were reframed. The final questionnaire included a total of 35 statements on expectation and perception level of the respondents and 10 statements on customer satisfaction and loyalty were framed to seek the perception of the respondents with respect to the banks they were transacting business.

Chapter Five

Analysis of services offered by banks, service quality expectation and perception of customers and service quality gaps

This chapter is based on the first objective, which includes the service expectation and perception level of the customers rendered by public, private and multi-state cooperative banks and identify the service quality gaps and further analyze the satisfaction level of the customers towards various services offered by the banks.

In the backdrop of economic globalization happening across the globe, banks are facing stiff competition, which has led to a change in their day to day operations. Banks today have visualised that, winning and retaining customers has become the order of the day, infact it is evident that the cost of attracting a new customer is higher as compared to the cost of retaining the existing/old customers, thus banks are emphasizing on the importance of customer satisfaction. Nowadays customers prefer quality service with minimum waiting time, prefer tech- savvy banks offering quick, efficient and hassle free services. Service quality in the banking sector has received a widespread attention and importance over the past decades. Price charged by different banks is no longer enough to attract customers or maintain customer loyalty; on the other hand it is the key determining factors of service quality considered to be relevant in today's era of stiff competition. The task of the management is to bridge the gap between the perceived value of service quality and expectations of the customer is the biggest challenge. Thus the banks have to identify the gaps and develop innovative strategies to increase customer satisfaction. Further the expectation of the customers shall increase with every good experience they receive from the service provider. Against this background, the commercial banks need to know and understand the needs, preferences and requirements of their clients from time to time, which will help them to reduce the gap between their expectation and perception, leading to higher satisfaction. This chapter attempts to make an analysis of expectation and perception of the customers across public, private and multi-state cooperative banks and identify the gaps in the services rendered by the respective banks and also analyse the satisfaction of the customers towards various services offered by the banks.

5.1 Scale Generation

The primary data for the study was collected with the help of pre-designed schedule addressing the customers of public, private and multi-state cooperative banks; the schedule was prepared on the basis of previous developed scales by various researchers on service quality, from the available literature studies and discussion with the experts in the field of banking. The questionnaire comprised of 13 items of general information for the respondents , 9 items were related various services offered by the banks to their customers and 35 items related to various aspects of service quality pertaining to the banks and 5 items each related to customer satisfaction and customer loyalty were asked on a 5 point Likert's scale ranging from strongly agree to strongly disagree, covering the entire domain of the study, further the data was purified by data purification process using factor analysis, finally the outcome of factor analysis resulted seven dimensions of bank service quality. The seven dimensions of service quality extracted from factor analysis are given as below:

i. **Bank Infrastructure→** The dimension of bank infrastructure refers to providing good ambience and physical facilities within the branch to facilitate the customers in a better way. Providing of good infrastructural facilities, displaying pamphlets, providing of brochures and handouts to the customers.

ii. **Transaction Security→** Transaction security dimension refers to safety, security and confidentiality of the transaction of the customers with their respective banks, it is the assurance to be given by the bankers regarding the safety of their investments and secrecy of the transaction held with the bank.

iii. **Employee Trust→** The dimension of employee trust refers to the confidence and the faith the customers have in the employees of the banks, whereby the will show accurate presentation of service, shall guide them properly, provide services in time and shall be prompt in addressing their problems.

iv. **Employee Commitment→** Employee commitment dimension refers to committed job of the employees by providing prompt and accurate services, doing the job within stipulated time, responding to customers request promptly and communicating to the customers regularly.

v. **Modern Services→** The dimension of modern services relate to efforts taken by the banks in providing tech savvy products and services to better facilitate their customers and do their work instantly, modern services include ATM kiosks, pas book printing machines, cask deposit machines, credit card, debit card, e-banking, m-banking, electronic fund transfer, NRFT/RTGS etc.

vi. **Employee Empathy→** The dimension of employee empathy refers to the ability of the bank employees to understand the feelings and aspirations of the customers. It refers to individual attention given by the employees to their customers, understanding their difficulties and problems, customer handling and efficient delivery of service to them.

vii. **Employee Approach→** The employee approach dimension refers to the behaviour of the employees with the customers of the banks. the employees of the bank are expected to talk with their client's politely, method of communication should be suitable for the understanding of the customers and should help the customers whenever they face difficulties in transacting with the bank.

5.2 Statistical tools used

For achieving the results of the objective of the study, descriptive statistics was used to calculate the mean scores and service gaps between expectation and perception level of the customers on seven dimensions of service quality pertaining to public, private and cooperative banks under study. Further paired sample t-test was used to check significant difference in the services offered by the banks operating in public, private and multi-state cooperative sector banks. One way Anova was used to find any statistical significant difference in the satisfaction level of the customers with regard to various services offered by public, private and multi-state cooperative banks.

5.3 Analysis of data

The data for the study was collected with the help of a pre designed questionnaire, further statements were asked to the respondents based on the quality aspect of services offered by the banks, the responses were collected on the their expectation and

perception level of services rendered by the banks, based upon which gaps were identified sector wise in the services rendered by the public, private and multi-state cooperative banks. The following paragraphs demonstrate the gap between customers' expectations and perceptions across all three sector banks on various dimensions of service quality.

The service quality gap is the difference between expectation of service prior to availing it and perception or actual experience after the service is availed by the customers.

Service quality Gap = Perception (P) – Expectation (E)

Table 5.3.1: Table showing KMO and Bartlett's test

KMO and Bartlett's Test		
Kaiser-Mayer-Olkin measures of sampling Adequacy		.980
Bartlett's Test of Sphericity	Approx.Chi-Sqr	15349.920
	df	595
	Sig.	0.000

(Source: Primary data)

Table 5.3.1 shows the Kaiser – Meyer – Olkin (KMO) test, this test measures the sampling adequacy, to check the adequacy of the sample, in other words the test was applied to see that the data was normally distributed or not. Further if the value KMO value lies from 0.5 to 1, it can be inferred that the data is normally distributed. From the above table it is observed that the value is greater than the 0.5, thus the data is quite adequate to be considered for conducting factor analysis.

Further the Bartlett's Test of Sphericity test was applied to check the null hypothesis; the item correlation matrix was an identity matrix. The hypothesis was tested through Chi- Square test, the value of Chi- Square for service quality dimensions (15349.920), which was significant at 5%, thus it can be said that the data measures were suitable for conducting factor analysis.

Exploratory Factor Analysis: The factor analysis was done using principle component factor analysis (PCA) with Varimax rotation was applied to find out the underlying factors in the questionnaire on service quality. The factor analysis for service quality resulted in seven factors as per table no.5.3.3, customer satisfaction resulted as, first factor as per table no.5.3.7 and customer loyalty resulted as, second factor as per table

no.5.3.7. The details of the factors of service quality, customer satisfaction and customer loyalty with factor names, Eigen values, items converged, factor loadings and variance percentage are shown as below:

Table 5.3.2: Table showing total variance explained

Total variance explained

Comp	Initial Eigen values			Extraction Sums of Squared Loadings			Rotation Sums of Squared Loadings		
	Total	% of Variance	Cumulative %	Total	% of Variance	Cumulative %	Total	% of Variance	Cumulative %
1	9.877	28.220	28.220	9.877	28.22	28.220	4.700	13.429	13.42
2	4.425	12.643	40.863	4.425	12.64	12.643	4.020	11.485	24.91
3	2.984	8.526	49.389	2.984	8.52	8.526	3.744	10.697	35.61
4	2.275	6.500	55.889	2.275	6.50	6.500	3.720	10.627	46.239
5	1.846	5.274	61.163	1.846	5.274	5.274	3.197	9.135	55.375
6	1.662	4.749	65.911	1.662	4.749	4.749	2.587	7.390	62.765
7	1.115	3.184	69.095	1.115	3.184	3.184	2.215	6.330	69.095

(Source: Primary data)

From table 5.3.2 above shows the amount of variance in the independent factor extracted, it can be said that seven factors are extracted having Eigen values above 1 and the seven factors extracted explains 69% variance.

Table 5.3.3: Table showing exploratory factor analysis, using PCA method of rotation for independent variables

No	Item	Loading	alpha	Factor Name
1	P1	0.826	0.827	Bank Infrastructure
	P2	0.787		
	P3	0.682		
	P4	0.612		
2	P9	0.766	0.786	Transaction Security
	P19	0.737		
	P10	0.684		
3	P17	0.766	0.874	Employee trust
	P8	0.752		
	P7	0.745		

	P22	0.744		
	P18	0.703		
	P6	0.638		
	P5	0.614		
4	P11	0.768	0.88	Employee Commitment
	P12	0.759		
	P15	0.733		
	P14	0.726		
	P13	0.724		
5	P33	0.789	0.867	Modern Services
	P35	0.648		
	P34	0.642		
	P31	0.618		
	P32	0.577		
6	P30	0.549	0.867	Employee Empathy
	P26	0.792		
	P25	0.775		
	P29	0.772		
	P27	0.752		
	P28	0.726		
7	P24	0.792	0.883	Employee Approach
	P16	0.791		
	P21	0.743		
	P20	0.734		
	P23	0.696		

(Source: Primary data)

Table 5.3.3 shows the factors extracted from the statements pertaining to service quality of the banks across public, private and multi-state cooperative banks and in all seven factors were extracted as per details given in the above table.

Service Quality Dimensions

- Bank Infrastructure
- Employee Commitment
- Employee Approach
- Employee Trust
- Employee Empathy
- Transaction Security

- Modern services

Testing the reliability of factors extracted sector wise

Table 5.3.4: Table showing the reliability statistics (Cronbachs' Alpha) of dimensions pertaining to public, private and multi-state cooperative banks

Factors Extracted	Public sector banks	Private sector banks	Cooperative sector banks
Bank Infrastructure	.866	.864	.698
Transaction Security	.886	.848	.780
Employee trust	.901	.856	.800
Employee Commitment	.907	.882	.763
Modern Services	.887	.866	.789
Employee Empathy	.895	.850	.758
Employee Approach	.805	.775	.634

(Source: Primary data)

Table 5.3.4 gives the details of Cronbach's value for all the dimensions of service quality calculated sector wise. From the above table it is observed that majority of the values are around 0.7, which means that the data is reliable for carrying data analysis and drawing inferences.

Exploratory factor analysis for dependent variables

Table 5.3.5: Table showing KMO and Bartlett's test

KMO and Bartlett's Test		
Kaiser-Meyer-Olkin Measure of Sampling Adequacy.		.821
Bartlett's Test of Sphericity	Approx. Chi-Square	1858.985
	df	10
	Sig.	0.000

Source: Primary data

Table 5.3.5 shows the Kaiser – Meyer – Olkin (KMO) test, since the value lies from 0.5 to 1, it can be said that data is normally distributed, from the above table it is observed that the value is greater than the 0.5, thus the data is quite adequate to be considered conducting factor analysis.

Table 5.3.6: Table showing total variance explained

Total variance explained

Comp	Initial Eigen values			Extraction Sums of Squared Loadings		
	Total	% of Variance	Cumulative %	Total	% of Variance	Cumulative %
1	4.787	47.865	47.865	4.787	47.865	47.865
2	1.292	12.917	60.782	1.292	12.917	60.782
3	.761	7.608	68.391			
4	.582	5.816	74.206			
5	.493	4.931	79.137			
6	.487	4.869	84.006			
7	.471	4.709	88.715			
8	.417	4.174	92.890			
9	.376	3.764	96.653			
10	.335	3.347	100.000			

Source: Primary data

The table above shows the amount of variance in the dependent factor extracted, it can be said that two factors are extracted having Eigen values above 1 and those factors extracted explain 61% variance.

Table 5.3.7: Table showing exploratory factor analysis, using PCA method of rotation for dependent variables

Exploratory Factor Analysis

Item	Factor Loading	alpha	Name of the factor
EX1	**.799**	0.833	Customer Satisfaction
EX2	**.819**		
EX3	**.736**		
EX4	**.747**		
EX5	**.655**		
EX6	**.546**	0.801	Customer Loyalty
EX7	**.810**		
EX8	**.715**		
EX9	**.827**		
EX10	**.588**		

Source: Primary data

Table 5.3.7 shows the factors extracted and reliability test done for the statements pertaining to customer satisfaction and customer loyalty of the banks across public, private and multi-state cooperative banks, in all two factors were extracted as per details given in the above table.

Confirmatory factor Analysis:

CFA is used by the researcher based on theoretical knowledge and hypothesized relations among various constructs and to test the structure that is hypothesized. A confirmatory factor analysis (CFA) using AMOS 16 is applied to test the theoretical model and hypothesis (Nguyen, 2007) vis-a-vis to assess fitness, reliability and validity of measurement models for different constructs in the study. This model depicts the relationship between latent variables and is the basis for hypotheses testing. The relationship among the constructs of service quality, customer satisfaction, customer loyalty and financial performance is presented to showcase the relationship that exists in the research model. The evaluated latent variables extracted from exploratory factor analysis leads to seven service quality dimensions.

Validity:

To verify the validity of the model the following validity test were done viz. convergent validity, composite reliability and discriminant validity.

Table 5.3.8: CFA Results for the study model

In order to achieve reliability and validity of the measurement model, first-order and second-order confirmatory factor analysis were conducted for the seven dimensional model of service quality pertaining to public, private and cooperative banks.

Constructs	Statements	Path	AVE (> 0.5)	CR (> 0.7)
Bank Infrastructure (BI)	Materials related to the service (such as pamphlets or brochures) are visually appealing.	0.748	0.549	0.829
	Employees of the bank are well dressed and appear neat.	0.769		
	Infrastructural facilities in the bank are visually appealing.	0.781		
	Bank has modern equipments for providing services.	0.661		
Employee Assurance (EA)	Behaviour of employees of the bank instils confidence in the customers.	0.73	0.518	0.843
	Employees of the bank are polite with you.	0.73		
	Employees of the bank have required knowledge to render services to customers.	0.732		

	Method of communication used by the bank employees suits the requirements of the customers	0.687		
	Customers of the bank are given individual attention.	0.72		
Employee Commitment (EC)	Employees of the bank are prompt in providing better services to the customers.	0.755	0.551	0.860
	Employees of the bank are readily willing to help customers.	0.781		
	Employees of the bank are never hesitant to respond to customer's request.	0.777		
	Employees of the bank constantly communicate with the customers.	0.722		
	Employees of the bank inform customers as and when services are performed	0.671		
Employee Empathy (EE)	Employees are always willing to clear the doubts of the customers.	0.729	0.524	0.852
	The bank employees respond positively to customer complaints.	0.776		
	The bank is open to complaints and criticism of the customers.	0.736		
	The bank understands specific needs of the customers.	0.704		
	Operating hours of the bank are convenient to the customers.	0.714		
	The bank employees have customers' best interest at heart.	0.679		
Employee Trust (ET)	Bank employees avoid disclosing information about the customer's transactions to others.	0.508	0.462	0.856
	Employees of the bank give proper guidance to the customers.	0.722		
	Customers can trust employees of the bank.	0.719		
	Bank employees deliver services to customers as early as possible.	0.719		
	Bank employees show sincere interest in solving customer's problems.	0.742		
	Bank employees deliver the work within a stipulated time period as promised by them.	0.628		
	Employees of the bank give accurate presentation of services.	0.689		
Modern Services	The banker provides a wide range of modern services to the customers from time-to-time.	0.702	0.520	0.844

(MS)	Bank offers user-friendly technological services to its customers.	0.757		
	Personal accounts are updated from time-to-time and can be accessed through internet and ATMs.	0.769		
	Bank website offers financial records and information of customers.	0.666		
	Bank offers modern banking facilities to the customers 24*7 and hassle free.	0.708		
Transaction Security (TS)	The bank keeps its records accurately and up-to-date.	0.709	0.486	0.740
	Bank provides error free records and statements.	0.704		
	The transactions with your bank are safe and secure.	0.679		

(Source: primary data)

From the above table the estimated parameters of the First-order Factor Model is found, the results of the Confirmatory Factor Analysis for the perceived service quality indicate that all factor loadings are significant and providing evidence to support the convergent validity of the items measured (Anderson and Gerbing, 1988). The average variance extracted ranged from 0.462 to 0.551, which were above the recommended threshold of 0.50 as suggested by Fornell and Larcker (1981), further the convergent reliability of all dimensions were above the threshold limit of 0.70 indicating that the measures for all seven dimensions had adequate convergent validity.

Table 5.3.9: Second order CFA:

The Second-order Confirmatory Factor Analysis model for perceived service quality was designed to test the relationships between seven dimensions of service quality pertaining to various categories of banks (bank infrastructure, employee empathy, employee trust, employee commitment, employee assurance, transaction security and modern services) and one primary dimension of perceived service quality.

Construct	Variables	Path	AVE (> 0.5)	CR (>0.7)
Service Quality	Bank Infrastructure (BI)	0.957	0.923	0.988
	Employee Assurance (EA)	0.92		
	Employee Commitment (EC)	0.974		

Dimensions (SQD)	Employee Empathy (EE)	0.993		
	Employee Trust (ET)	0.937		
	Modern Services (MS)	0.967		
	Transaction Security (TS)	0.976		

(Source: Primary data)

1) **Convergent validity**

The convergent validity was tested for the four constructs using the criterion suggested by Fornell and Larcker (1981). The factor loadings of all the constructs must be significant and should posses a composite reliability value of 0.70 & above, the construct reliability should be above 0.80 and the average variance extract should be at least above 0.50.

2) **Composite reliability**

The composite reliability assesses the overall reliability among various items loaded on the latent variables. A value composite reliability (CR) higher than 0.70 is generally considered to be good (Hair et.al, 2006)

3) **Discriminant validity**

The discriminant validity is used to check whether the constructs in the research model is distinct and are different from other constructs. The convergence of the observed variables in the same construct is determined by high factor loadings. The factor loadings should generally be above 0.50 (Malhotra, 2007). The discriminant validity in the study is established with the help of average variance extract (AVE) in the model.

Objective:

1) To explore the opinion of the customers of public, private and multi-state cooperative banks in relation to services offered, expectation and perception level of the customers towards service quality and to identify service quality gaps.

Hypothesis:

H1→ There is a significant difference in the service quality expectation and perception level of the customers of public, private and multi state cooperative banks.

Descriptive Statistics and Paired Sample Statistics to test the gap between Customers expectations and perceptions across seven dimensions of service quality:

Public sector banks:

Table 5.3.10: Descriptive Statistics on Bank infrastructure dimension of service quality:

	Statements	Expectation (E)		Perception (P)		Gap Score (P-E)
Dimension		Mean	Std. Dev	Mean	Std. Dev	
BI 1	Materials related to the service (such as pamphlets or brochures) are visually appealing.	4.24	0.67	2.89	0.99	-1.35
BI 2	Employees of the bank are well dressed and appear neat.	4.43	0.66	3.05	1.06	-1.39
BI 3	Infrastructural facilities in the bank are visually appealing.	4.66	0.67	3.06	0.98	-1.6
BI 4	Bank has modern equipments for providing services.	4.49	0.63	3.47	1.09	-1.02

(Source: Primary data)

Table 5.3.10 shows the descriptive statistics of bank infrastructure dimension of service quality, the infrastructure facilities in the bank had the highest mean score, which indicates that customers expect the banks to have a better infrastructure. The highest perception mean score and the lowest service quality gap in terms of banks having modern equipments indicate that customers are relatively satisfied with banks providing modern equipments to facilitate them in a better way.

Table 5.3.11: Descriptive Statistics on employee approach dimension of service quality

	Statements	Expectation (E)		Perception (P)		Gap Score (P-E)
Dime		Mean	Std.	Mean	Std.	

nsion			Dev		Dev	
EA 1	Behaviour of employees of the bank instils confidence in the customers.	4.05	0.77	3.15	1.06	-0.9
EA 2	Employees of the bank are polite with you.	4.24	0.71	3.17	1.02	-1.03
EA 3	Employees of the bank have required knowledge to render services to customers.	4.02	0.7	2.86	1.12	-1.16
EA 4	Method of communication used by the bank employees suits the requirements of the customers	4.04	0.73	3.26	1.05	-0.78
EA 5	Customers of the bank are given individual attention.	4.13	0.67	3.03	1.07	-1.1

(Source: Primary data)

Table 5.3.11 shows the descriptive statistics of the employee approach dimension of service quality in case of public sector banks. Out of the five statements mentioned above, employees of the bank should be polite yielded the highest mean score for expectation, which indicates that the customers expect the employees to behave in a decent manner and attend to their problems with cool head. The highest perception mean score and the lowest service quality gap were observed in the method by which employees of the bank communicate with their customers to understand their problems and difficulties encountered.

Table 5.3.12: Descriptive Statistics on employee empathy dimension of service quality:

	Statements	Expectation (E)		Perception (P)		Gap Score (P-E)
Dimen sion		Mean	Std. Dev	Mean	Std. Dev	
EE 1	Employees are always willing to clear the doubts of the customers.	4.08	0.73	3.06	1.11	-1.02
EE 2	The bank employees respond positively to customer complaints.	4.17	0.75	3.39	1.06	-0.78
EE 3	The bank is open to complaints and criticism of the customers.	4.28	0.73	3.38	1.09	-0.9
EE 4	The bank understands specific needs of	4.11	0.77	3.25	1.08	-0.86

	the customers.					
EE 5	Operating hours of the bank are convenient to the customers.	4.22	0.75	3.26	1.17	-0.96
EE 6	The bank employees have customers' best interest at heart.	4.02	0.76	2.88	1.16	-1.14

(Source: Primary data)

Table 5.3.12 shows the descriptive statistics of employee empathy dimension, whereby the highest expectation mean was that the customers expect the banks to accept complains and criticism, in the bargain to improve its services, on the other hand the highest perception mean and the lowest service quality gap was that bank employees respond to the complains of the customers.

Table 5.3.13: Descriptive Statistics on employee trust dimension of service quality:

	Statements	Expectation (E)		Perception (P)		Gap Score (P-E)
Dimension		Mean	Std. Dev	Mean	Std. Dev	
ET 1	Bank employees avoid disclosing information about the customer's transactions to others.	4.02	0.82	2.97	1.25	-1.05
ET 2	Employees of the bank give proper guidance to the customers.	4.09	0.71	3.27	1.04	-0.82
ET 3	Customers can trust employees of the bank.	4.09	0.69	3.41	1.00	-0.68
ET 4	Bank employees deliver services to customers as early as possible.	4.12	0.73	3.04	1.17	-1.08
ET 5	Bank employees show sincere interest in solving customer's problems.	4.2	0.68	3.18	1.05	-1.02
ET 6	Bank employees deliver the work within a stipulated time period as promised by them.	4.04	0.73	2.94	1.19	-1.1
ET 7	Employees of the bank give accurate presentation of services.	4.08	0.71	3.28	1.2	-0.8

(Source: Primary data)

Table 5.3.13 shows the descriptive statistics of employee trust dimension of service quality. The table depicts that customers expect the employees of the bank to deliver the

services as early as possible to avoid waiting time of the customers. The highest mean score perception is that customers' trust the employees of the bank, which is also having lowest service quality gap score among the other statements.

Table 5.3.14: Descriptive Statistics on employee commitment dimension of service quality:

	Statements	Expectation (E)		Perception (P)		Gap Score (P-E)
Dimen sion		Mean	Std. Dev	Mean	Std. Dev	
EC 1	Employees of the bank are prompt in providing better services to the customers.	4.14	0.72	3.02	1.09	-1.12
EC 2	Employees of the bank are readily willing to help customers.	4.15	0.69	3.09	1.06	-1.06
EC 3	Employees of the bank are never hesitant to respond to customer's request.	4.03	0.70	3.12	1.04	-0.91
EC 4	Employees of the bank constantly communicate with the customers.	4.02	0.76	3.29	1.07	-0.73
EC 5	Employees of the bank inform customers as and when services are performed	4.02	0.74	3.00	1.16	-1.02

(Source: Primary data)

Table 5.3.14 shows the descriptive statistics of employee commitment dimension of service quality. In all five items were used, the statement, employees are readily willing to help the customers got highest expectation mean score, which implies that customers of the banks expect to help customers. Further the statement that the employees communicate with their customers had the highest perception score and the lowest service quality gap. This indicates that bank employees are in constant touch with their customers to address their issues and grievances.

Table 5.3.15: Descriptive Statistics on modern services dimension of service quality:

	Statements	Expectation (E)		Perception (P)		Gap Score (P-E)
Dimen		Mean	Std.	Mean	Std.	

sion			Dev		Dev	
MS 1	The banker provides a wide range of modern services to the customers from time-to-time.	4.42	0.75	3.15	1.04	-1.27
MS 2	Bank offers user-friendly technological services to its customers.	4.33	0.71	3.16	1.12	-1.17
MS 3	Personal accounts are updated from time-to-time and can be accessed through internet and ATMs.	4.27	0.67	3.23	1.09	-1.03
MS 4	Bank website offers financial records and information of customers.	4.27	0.61	3.43	0.99	-0.84
MS 5	Bank offers modern banking facilities to the customers	4.38	0.62	3.42	0.99	-0.96

(Source: Primary data)

Table 5.3.15 shows the descriptive statistics of modern services dimension of service quality. The statement, banks provide wide range of modern services is expected by the customer from the service provider, to facilitate them better. On the other hand the highest perception mean and the lowest service quality gap was that, the banks are offering financial records and information on their website to help the customers, not to physically visit the bank and save their time and energy.

Table 5.3.16: Descriptive Statistics on transaction security dimension of service quality:

	Statements	Expectation (E)		Perception (P)		Gap Score (P-E)
Dimen sion		Mean	Std. Dev	Mean	Std. Dev	
TS 1	The bank keeps its records accurately and up-to-date.	4.08	0.69	3.22	1.04	-0.86
TS 2	Bank provides error free records and statements.	4.05	0.77	3.06	1.04	-0.99
TS 3	The transactions with your bank are safe and secure.	4.21	0.75	3.1	1.13	-1.01

(Source: Primary data)

Table 5.3.16 shows the descriptive statistics of transaction security dimension of service quality. It is observed that the highest expectation mean score for the statement, transactions of the bank should be safe and secure; this implies that customers expect safety and security of their funds with their banker. Further highest perception score and lowest service quality gap was for the statement that banks are updating customers pass book and other documents from time to time.

Table 5.3.17: Paired Sample Statistics to test the gap between the Customers Expectations and Perceptions for Public Sector Banks: Bank infrastructure (BI)

Statements	Pairs	Mean	Std. Dev	t	df	P-value
BI 1	E1 & P1	-1.35	1.1675	23.328	408	0.000
BI 2	E2 & P2	-1.39	1.2477	22.475	408	0.000
BI 3	E3 & P3	-1.6	1.1146	28.960	408	0.000
BI 4	E4 & P4	-1.02	1.154	17.832	408	0.000

(Source: Primary data)

Table 5.3.15 shows paired sample t-test to analyze the gap between customer's expectation and perception of bank infrastructure dimension pertaining to public sector banks. To test this objective, hypothesis has been tested at 5% level of significance, thus it is observed that there is a significant difference between the customers' expectations and perceptions of service quality in the public sector banks regarding the statements of bank infrastructure dimension, thus we reject the null hypotheses. The above table shows that the highest gap is 1.6 for the statement BI3 i.e. infrastructural facilities in the bank are appealing and the lowest gap is 1.02 for the statement BI4: bank has modern equipments for providing services. This implies that the customers are relatively more satisfied with the modern amenities of the banks among the other statements of bank infrastructure dimension.

Table 5.3.18: Paired Sample Statistics to test the gap between the Customers' Expectations and Perceptions for Public Sector Banks: Employee Approach (EA)

Statements	Pairs	Mean	Std. Dev	t	df	P-value

EA 1	E23& P23	-0.9	1.2556	14.461	408	0.000
EA 2	E20& P20	-1.03	1.1567	17.964	408	0.000
EA 3	E21& P21	-1.16	1.2262	19.085	408	0.000
EA 4	E16& P16	-0.78	1.2393	12.697	408	0.000
EA 5	E24& P24	-1.1	1.1787	18.827	408	0.000

(Source: Primary data)

Table 5.3.18 shows the paired sample statistics used to analyze the gap between customer expectation and perception of employee approach dimension pertaining to public sector banks. It is found that there is a significant difference in all five statements of employee approach dimension. The above table shows that the highest gap is 1.16 for the statement EA3 i.e. employees of the bank have required knowledge to provide services and the lowest gap is 0.78 for the statement EA4: i.e. bank employees have appropriate method of communicating with the customers. This implies that the customers are relatively more satisfied with the method of communication used by the employees to interact with the customers and get their work done among the other statements of employee approach dimension. From the table, it is observed that there is significant difference in expectation and perception level of customers pertaining to employee approach. Thus we accept the alternate hypothesis since the p-value is <0.05.

Table 5.3.19: Paired Sample Statistics to test the gap between the Customers Expectations and Perceptions for Public Sector Banks: Employee Commitment (EC)

Statements	Pairs	Mean	Std. Dev	t	df	P-value
EC 1	E12& P12	-1.12	1.296	17.435	408	0.000
EC 2	E13& P13	-1.06	1.2619	16.946	408	0.000
EC 3	E14& P14	-0.91	1.2783	14.362	408	0.000
EC 4	E15& P15	-0.73	1.3081	11.258	408	0.000
EC 5	E11& P11	-1.02	1.3968	14.732	408	0.000

(Source: Primary data)

Table 5.3.19 shows the paired sample statistics to analyze the gap between customers' expectation and perception of employee commitment dimension pertaining to public sector banks. It is observed that there is a significant difference in all five statements of employee commitment dimension. Highest gap is 1.12 for the statement EC1 i.e. employees of the bank are prompt in providing services and the lowest gap is 0.73 for the statement EC4: bank employees constantly communicate with their customers. This implies that the customers are relatively more satisfied with the fact that the bank employees on a regular basis communicate with the customers for any queries or feedback by the employees among the other statements of employee commitment dimension. From the table it is observed that there is significant difference in expectation and perception level of customers pertaining to employee commitment. Thus we accept the alternate hypothesis since the p-value is <0.05.

Table 5.3.20: Paired Sample Statistics to test the gap between the Customers Expectations and Perceptions for Public Sector Banks: Employee Empathy (EE)

Statements	Pairs	Mean	Std. Dev	t	df	P-value
EE 1	E29& P29	-1.02	1.2467	16.506	408	0.000
EE 2	E28& P28	-0.78	1.2423	12.667	408	0.000
EE 3	E27& P27	-0.9	1.2147	14.948	408	0.000
EE 4	E26& P26	-0.86	1.2485	13.897	408	0.000
EE 5	E25& P25	-0.96	1.3762	14.073	408	0.000
EE 6	E30& P30	-1.14	1.3719	16.764	408	0.000

(Source: Primary data)

Table 5.3.20 shows the paired sample statistics to analyze the gap between customers' expectation and perception of employee empathy dimension pertaining to public sector banks. It is observed that there is a significant difference in all six statements of employee empathy dimension. The highest gap is 1.14 for the statement EE6 i.e. employees of the bank have customer's best interest at heart and the lowest gap is 0.73 for the statement EE2: bank employees quickly respond to customer complaints. This implies that the customers are relatively more satisfied with the feedback mechanism in case they are not satisfied with the service or any aspect related to bank among the other

statements of employee empathy dimension. From the table it is observed that all statements pertaining to employee empathy shows significant difference in expectation and perception level of customers. Thus we accept the alternate hypothesis since the p-value is <0.05.

Table 5.3.21: Paired Sample Statistics to test the gap between the Customers Expectations and Perceptions for Public Sector Banks: Employee Trust (ET)

Statements	Pairs	Mean	Std. Dev	t	df	P-value
ET 1	E5& P5	-1.05	1.3984	15.148	408	0.000
ET 2	E18& P18	-0.82	1.2105	13.666	408	0.000
ET 3	E17& P17	-0.68	1.1749	11.676	408	0.000
ET 4	E8& P8	-1.08	1.4488	15.039	408	0.000
ET 5	E7& P7	-1.02	1.2434	16.550	408	0.000
ET 6	E6& P6	-1.1	1.4364	15.350	408	0.000
ET 7	E22& P22	-0.8	1.3909	11.604	408	0.000

(Source: Primary data)

Table 5.3.21 shows the paired sample statistics to analyze the gap between customers' expectation and perception of employee trust dimension pertaining to public sector banks. It is observed that there is a significant difference on all seven statements of employee trust dimension, wherein the highest gap of 1.10 for the statement ET5 i.e. employees show sincere interest in solving the problems of the customer and the lowest gap is 0.68 for the statement ET3: customers can trust the employees of the bank. This implies that the customers are relatively more satisfied with the trust worthiness of the employees, which they feel is very relevant to have long lasting relationship with the banker than other statements of employee trust dimension. Further it is observed that all statements pertaining to employee trust show significant difference in expectation and perception level of customers, thus we accept the alternate hypothesis since the p-value is significant at 5% level of confidence.

Table 5.3.22: Paired Sample Statistics to test the gap between the Customers Expectations and Perceptions for Public Sector Banks: Modern Services (MS)

Statements	Pairs	Mean	Std. Dev	t	df	P-value
MS 1	E31& P31	-1.27	1.2206	20.991	408	0.000
MS 2	E32& P32	-1.17	1.3078	18.049	408	0.000
MS 3	E33& P33	-1.03	1.2713	16.345	408	0.000
MS 4	E34& P34	-0.84	1.1512	14.721	408	0.000
MS 5	E35& P35	-0.96	1.0919	17.737	408	0.000

(Source: Primary data)

Table 5.3.22 shows the paired sample statistics was used to analyze the gap between customers' expectation and perception of modern services dimension pertaining to public sector banks. It is observed that there is a significant difference in all five statements of modern service dimension. The highest gap is 1.27 for the statement MS1 i.e. bank provides wide range of modern services and the lowest gap is 0.84 for the statement MS4: bank website offers financial records and information. This implies that the customers are relatively more satisfied with the bank website wherein sitting any part of the world they can transact and get information from the bank, thus helping them save time and efforts among the other statements of modern services dimension. From the table it is observed that all statements pertaining to modern services shows significant difference on expectation and perception level of customers. Thus we accept the alternate hypothesis since the p-value is significant at 5% level of confidence.

Table 5.3.23: Paired Sample Statistics to test the gap between the Customers Expectations and Perceptions for Public Sector Banks: Transaction Security (TS)

Statements	Pairs	Mean	Std. Dev	t	df	P-value
TS 1	E9& P9	-0.86	1.2232	14.184	408	0.000
TS 2	E10& P10	-0.99	1.2979	15.388	408	0.000
TS 3	E19& P19	-1.01	1.3021	15.649	408	0.000

(Source: Primary data)

Table 5.3.23 shows the paired sample statistics was used to analyze the gap between customers' expectation and perception of transaction security dimension pertaining to public sector banks. It is observed that there is a significant difference in all three

statements of transaction security dimension. The highest gap is 1.01 for the statement TS3 i.e. transactions with your bank are safe and secure and the lowest gap is 0.86 for the statement TS1: bank keeps its records accurately and up to date. This implies that the customers are relatively more satisfied with the banks that are ensuring safety and security of customer's funds whereby they ensure providing accurate and up dated information of their clients among the other statements of transaction security. From the table it is observed that all statements pertaining to transaction security shows significant difference in expectation and perception level of customers. Thus we accept the alternate hypothesis since the p-value is <0.05.

Table 5.3.24: Paired sample t-Test (Public sector banks)

	Paired differences		**t**	**df**	**Sig(two tailed)**
	Mean	**Std. Dev**			
Pair 1 EX-BI and PE-BI	5.36	3.836	28.224	408	0.000
Pair 2 EX-EA and PE-EA	4.97	4.775	21.024	408	0.000
Pair 3 EX-EC and PE-EC	4.84	5.354	18.260	408	0.000
Pair 4 EX-EE and PE-EE	5.66	6.018	18.997	408	0.000
Pair 5 EX-ET and PE-ET	6.55	6.985	18.941	408	0.000
Pair 6 EX-MS and PE-MS	5.27	4.808	22.140	408	0.000
Pair 7 EX-TS and PE-TS	2.86	3.155	41.935	408	0.000

(Source: Primary data)

Table 5.3.24 shows the paired sample t-test was used to analyze the gap between customers' expectation and perception of service quality on all seven dimensions pertaining to public sector banks. It is observed that gap exists between the expectation and perception level of the customers and is significant in public sector banks since all p-values are <0.05. Therefore, the null hypothesis has been rejected and the alternate hypothesis is accepted since there is a significant difference in the expectation and perception level of the customers of public sector banks. From the mean analysis and hypothesis testing, gap exists in case of public sector banks which are found to be significant with respect to all the seven dimensions of service quality.

Figure no. 5a: Bar diagram showing service quality gaps among public sector banks:

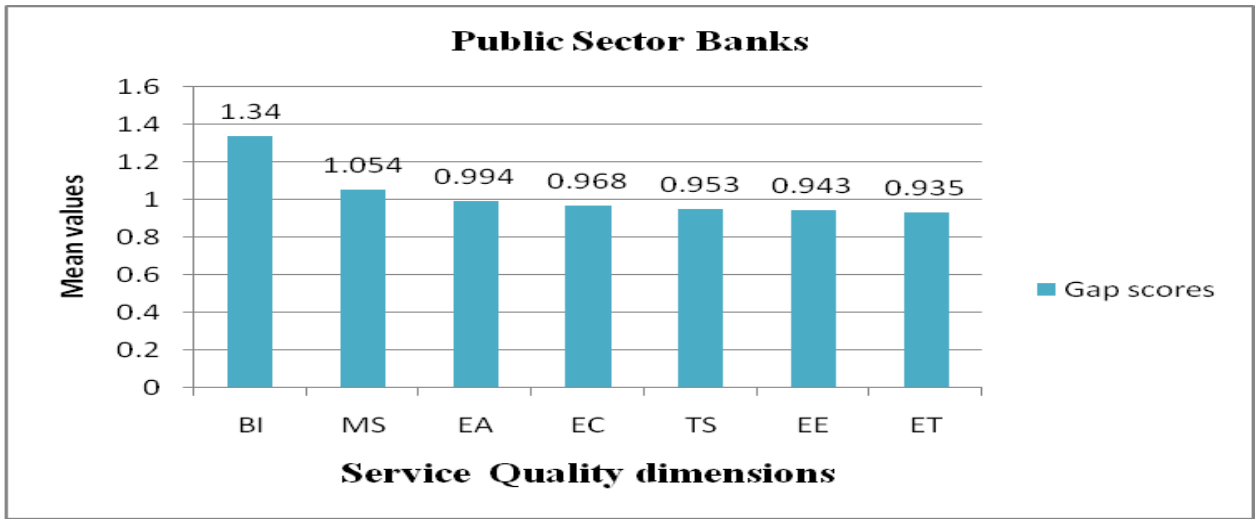

Source: Primary data

From the above bar graph 5a shows that gaps exists on all seven dimensions of service quality in case of public sector banks, the bank infrastructure and modern services dimensions shows highest gap, whereas employee trust and employee empathy dimension has the smallest gap in case of public sector banks. Thus it implies that public sector banks are performing better in terms of trust and empathy dimension and they require to concentrate own infrastructure facilities and improve upon their technological services to better facilitate their customers.

Descriptive Statistics and Paired Sample Statistics to test the gap between Customers' expectations and perceptions across seven dimensions of service quality:

Private sector banks:

Table 5.3.25: Descriptive Statistics on Bank infrastructure dimension of service quality:

	Statements	Expectation (E)		Perception (P)		Gap Score (P-E)
Dimension		Mean	Std. Dev	Mean	Std. Dev	
BI 1	Materials related to the service (such as pamphlets or brochures) are visually	4.30	0.66	3.25	0.78	-1.05

	appealing.					
BI 2	Employees of the bank are well dressed and appear neat.	4.33	0.65	3.68	0.90	-0.65
BI 3	Infrastructural facilities in the bank are visually appealing.	4.32	0.66	3.70	0.68	-0.62
BI 4	Bank has modern equipments for providing services.	4.05	0.86	3.27	0.99	-0.78

(Source: Primary data)

Table 5.3.25 shows the descriptive statistics of bank infrastructure dimension of service quality. It is observed that the employees of the bank are well dressed and appear neat had the highest mean score, which indicates that customers expect the bank to be well dressed and neat in rendering services to customers. The highest perception mean score and the lowest service quality gap in terms of banks having better infrastructural facilities indicate that customers are relatively satisfied with banks infrastructural facilities which are appealing to help them in a better way.

Table 5.3.26: Descriptive Statistics on employee approach dimension of service quality:

	Statements	Expectation (E)		Perception (P)		Gap Score (P-E)
Dimension		Mean	Std. Dev	Mean	Std. Dev	
EA 1	Behaviour of employees of the bank instils confidence in the customers.	4.14	0.82	3.22	0.84	-0.92
EA 2	Employees of the bank are polite with you.	4.23	0.71	3.47	0.85	-0.75
EA 3	Employees of the bank have required knowledge to render services to customers.	4.15	0.71	3.35	0.84	-0.79
EA 4	Method of communication used by the bank employees suits the requirements of the customers	4.20	0.73	3.42	0.80	-0.78
EA 5	Customers of the bank are given individual attention.	4.57	0.73	3.42	0.82	-1.15

(Source: Primary data)

Table 5.3.26 shows the descriptive statistics of employee approach dimension of service quality. The statement, customers' of the bank are given individual attention had the highest mean score for expectation, which indicates that the customers' expect the employees of the bank to pay individual attention and personally attend to individual problems faced by the customers'. The highest perceptions mean score and the lowest service quality gap was observed in the statement, employees of the bank are polite and courteous in delivering services to their customers'.

Table 5.3.27: Descriptive Statistics on employee commitment dimension of service quality:

	Statements	Expectation (E)		Perception (P)		Gap Score (P-E)
Dimension		Mean	Std. Dev	Mean	Std. Dev	
EC 1	Employees of the bank are prompt in providing better services to the customers.	4.38	0.74	3.42	0.87	-0.96
EC 2	Employees of the bank are readily willing to help customers.	4.28	0.73	3.44	0.87	-0.84
EC 3	Employees of the bank are never hesitant to respond to customer's request.	4.63	0.72	3.40	0.88	-1.23
EC 4	Employees of the bank constantly communicate with the customers.	4.38	0.74	3.32	0.84	-1.06
EC 5	Employees of the bank inform customers as and when services are performed	4.38	0.70	3.05	0.88	-1.33

(Source: Primary data)

Table 5.3.27 shows the descriptive statistics of employee commitment dimension of service quality. It is observed that the statement, employees are never hesitant to respond to customers' request had the highest expectation mean score, which implies that customers' expect the employees to quickly respond to their request and facilitate them. Whereas the statement that the employees are readily willing to help the customers' had the highest perception score and the lowest service quality gap, this

indicates that bank employees are always put customers as a priority to satisfy them and address their problems at the earliest.

Table 5.3.28: Descriptive Statistics on employee empathy dimension of service quality:

	Statements	Expectation (E)		Perception (P)		Gap Score (P-E)
Dimen sion		Mean	Std. Dev	Mean	Std. Dev	
EE 1	Employees are always willing to clear the doubts of the customers.	4.58	0.75	3.36	0.87	-1.22
EE 2	The bank employees respond positively to customer complaints.	4.31	0.77	3.38	0.81	-0.93
EE 3	The bank is open to complaints and criticism of the customers.	4.52	0.74	3.36	0.84	-1.16
EE 4	The bank understands specific needs of the customers.	4.19	0.75	3.33	0.82	-0.85
EE 5	Operating hours of the bank are convenient to the customers.	4.28	0.79	3.54	0.87	-0.74
EE 6	The bank employees have customers' best interest at heart.	4.32	0.77	3.60	0.81	-0.72

(Source: Primary data)

Table 5.3.28 shows the descriptive statistics of employee empathy dimension of service quality. The highest expectation mean was for the statement employees are willing to clear the doubts of the customers', in the bargain to improve their services, on the other hand the highest perception mean and the lowest service quality gap was that bank employees have customers' best interest at heart, this implies that employees of private sector are doing their level best to satisfy the customers' and retain them to face competition.

Table 5.3.29: Descriptive Statistics on employee trust dimension of service quality:

	Statements	Expectation (E)		Perception (P)		Gap Score (P-E)
Dimen		Mean	Std.	Mean	Std.	

sion			Dev		Dev	
ET 1	Bank employees avoid disclosing information about the customer's transactions to others.	4.21	0.73	3.32	0.91	-0.88
ET 2	Employees of the bank give proper guidance to the customers.	4.17	0.71	3.36	0.82	-0.81
ET 3	Customers can trust employees of the bank.	4.18	0.72	3.50	0.79	-0.68
ET 4	Bank employees deliver services to customers as early as possible.	4.17	0.73	3.24	0.92	-0.93
ET 5	Bank employees show sincere interest in solving customer's problems.	4.21	0.69	3.31	0.87	-0.90
ET 6	Bank employees deliver the work within a stipulated time period as promised by them.	4.41	0.77	3.11	0.91	-1.30
ET 7	Employees of the bank give accurate presentation of services.	4.19	0.74	3.31	0.96	-0.88

(Source: Primary data)

Table 5.3.29 shows the descriptive statistics of employee trust dimension of service quality. It depicts that the highest expectation mean is that customers' want the employees complete their work within the stipulated time and avoid waiting time of the customers and overcrowding in the branch. Whereas highest perception mean score was in the statement customers' trust the employees of the bank, which is also having lowest service quality gap score among the other statements.

Table 5.3.30: Descriptive Statistics on modern services dimension of service quality:

	Statements	Expectation (E)		Perception (P)		Gap Score (P-E)
Dimen sion		Mean	Std. Dev	Mean	Std. Dev	
MS 1	The banker provides a wide range of modern services to the customers from time-to-time.	4.16	0.76	3.44	0.84	-0.72
MS 2	Bank offers user-friendly technological services to its customers.	4.13	0.75	3.18	0.88	-0.95
MS 3	Personal accounts are updated from	4.12	0.76	3.12	0.86	-1.00

	time-to-time and can be accessed through internet and ATMs.					
MS 4	Bank website offers financial records and information of customers.	4.28	0.66	3.73	0.90	-0.54
MS 5	Bank offers modern banking facilities to the customers 24*7 & hassle free	4.31	0.70	3.85	0.99	-0.46

(Source: Primary data)

Table 5.3.30 shows the descriptive statistics of modern services dimension of service quality. The statement, bank website offers financial records and information is expected by the customer from the service provider, to facilitate them better, on the other hand the highest perception and the lowest service quality gap was that, the banks have modern banking facilities to help the customers' not physically visiting the branch and getting their work done quickly.

Table 5.3.31: Descriptive Statistics on transaction security dimension of service quality:

	Statements	Expectation (E)		Perception (P)		Gap Score (P-E)
Dimension		Mean	Std. Dev	Mean	Std. Dev	
TS 1	The bank keeps its records accurately and up-to-date.	4.22	0.75	3.18	0.83	-1.04
TS 2	Bank provides error free records and statements.	4.25	0.74	3.37	0.86	-0.88
TS 3	The transactions with your bank are safe and secure.	4.18	0.75	3.53	0.81	-0.65

(Source: Primary data)

Table 5.3.31 shows the descriptive statistics of transaction security dimension of service quality. The table depicts that the highest expectation mean score for the statement, bank provides error free records and statements; this implies that customers' expect correct information and safety of their transactions. Further highest perception mean score and lowest service quality gap was for the statement that, customers' perceive bank transactions are safe and secure, thus are contended with the service provider.

Table 5.3.32: Paired Sample Statistics to test the gap between the Customers Expectations and Perceptions for Private Sector Banks: Bank Infrastructure (BI)

Statements	Pairs	Mean	Std. Dev	t	df	P-value
BI 1	E1 & P1	-1.05	-0.893	21.000	410	0.000
BI 2	E2 & P2	-0.65	-0.854	19.276	410	0.000
BI 3	E3 & P3	-0.62	-0.878	22.941	410	0.000
BI 4	E4 & P4	-0.78	-0.983	23.197	410	0.000

(Source: Primary data)

Table 5.3.32 shows the paired sample statistics used to analyze the gap between customers' expectation and perception of bank infrastructure dimension pertaining to private sector banks. It is observed that there is a significant difference between the customers' expectations and perceptions of service quality in the public sector banks regarding the statements of bank infrastructure dimension, thus we accept the alternate hypothesis since the p-value is <0.05.The above table shows that the highest gap is 1.6 for the statement BI3 i.e. infrastructural facilities in the bank are appealing and the lowest gap is 1.02 for the statement BI4: bank has modern equipments for providing services. This implies that the customers are relatively more satisfied with the modern amenities of the banks among the other statements of bank infrastructure dimension. From the table it is evident that there is significant difference in expectation and perception level of customers pertaining to bank infrastructure dimension. Thus we accept the alternate hypothesis since the p-value is <0.05.

Table 5.3.33: Paired Sample Statistics to test the gap between the Customers Expectations and Perceptions for Private Sector Banks: Employee Approach (EA)

Statements	Pairs	Mean	Std. Dev	t	df	P-value
EA 1	E23& P23	-0.92	-0.72	15.074	410	0.000
EA 2	E20& P20	-0.75	-0.759	17.132	410	0.000
EA 3	E21& P21	-0.79	-0.798	18.381	410	0.000
EA 4	E16& P16	-0.78	-0.783	17.401	410	0.000
EA 5	E24& P24	-1.15	-0.742	17.408	410	0.000

(Source: Primary data)

Table 5.3.33 shows the paired sample statistics was used to analyze the gap between customers' expectation and perception of employee approach dimension pertaining to private sector banks. It is observed that there is a significant difference on all five statements of employee approach dimension. The highest gap score is 1.15 for the statement EA5 i.e. customers' of the bank are given individual attention and the lowest gap is 0.75 for the statement EA2: bank employees are polite with the customers. This implies that the customers are relatively more satisfied with the method of the employees to interact with the customers' in a polite manner and get their work done among the other statements of employee approach dimension. From the table it is observed that there is significant difference in expectation and perception level of customers pertaining to employee approach. Thus we accept the alternate hypothesis since the p-value is <0.05.

Table 5.3.34: Paired Sample Statistics to test the gap between the Customers Expectations and Perceptions for Private Sector Banks: Employee Empathy (EE)

Statements	Pairs	Mean	Std. Dev	t	df	P-value
EE 1	E29& P29	-1.22	-0.752	16.076	410	0.000
EE 2	E28& P28	-0.93	-0.735	16.317	410	0.000
EE 3	E27& P27	-1.16	-0.762	17.592	410	0.000
EE 4	E26& P26	-0.85	-0.759	16.312	410	0.000
EE 5	E25& P25	-0.74	-0.786	16.438	410	0.000
EE 6	E30& P30	-0.72	-0.881	18.735	410	0.000

(Source: Primary data)

Table 5.3.34 shows the paired sample statistics was used to analyze the gap between customers' expectation and perception of employee empathy dimension pertaining to private sector banks. From the above table it is observed that there is a significant difference in all six statements of employee empathy dimension, highest gap is 1.22 for the statement EE1 i.e. employees are always willing to clear the doubts of the customers and the lowest gap is 0.72 for the statement EE6: bank employees has customers' best

interest at heart. This implies that the customers are relatively more contended that the employees provide the best of their service to help the customers' in a better way and satisfy them among the other statements of employee empathy dimension. From the table it is observed that all statements pertaining to employee empathy shows significant difference in expectation and perception level of customers. Thus we accept the alternate hypothesis since the p-value is <0.05.

Table 5.3.35: Paired Sample Statistics to test the gap between the Customers Expectations and Perceptions for Private Sector Banks: Employee Trust (ET)

Statements	Pairs	Mean	Std. Dev	t	df	P-value
ET 1	E5& P5	-0.88	-0.888	17.521	410	0.000
ET 2	E18& P18	-0.81	-0.815	17.534	410	0.000
ET 3	E17& P17	-0.68	-0.783	17.933	410	0.000
ET 4	E8& P8	-0.93	-0.937	17.810	410	0.000
ET 5	E7& P7	-0.9	-0.903	18.924	410	0.000
ET 6	E6& P6	-1.3	-1.095	21.542	410	0.000
ET 7	E22& P22	-0.88	-0.883	17.422	410	0.000

(Source: Primary data)

Table 5.3.35 shows the paired sample statistics was used to analyze the gap between customers' expectation and perception of employee trust dimension pertaining to private sector banks. From the above table it is observed that there is a significant difference on all seven statements of employee trust dimension, wherein the highest gap of 1.3 for the statement ET6 i.e. bank employees deliver the work within stipulated period of time and the lowest gap is 0.68 for the statement ET3: customers can trust the employees of the bank. This implies that the customers are relatively more satisfied with the trust worthiness of the employees, and feel that it is relevant to have long relationship with the banker than other statements of employee trust dimension. Further it is observed that all statements pertaining to employee trust show significant difference in expectation and perception level of customers. Thus we accept the alternate hypothesis since the p-value is significant at 5% .

Table 5.3.36: Paired Sample Statistics to test the gap between the Customers Expectations and Perceptions for Private Sector Banks: Employee Commitment (EC)

Statements	Pairs	Mean	Std. Dev	t	df	P-value
EC 1	E12& P12	-0.96	0.884	18.962	410	0.000
EC 2	E13& P13	-0.84	0.956	17.236	410	0.000
EC 3	E14& P14	-1.23	0.928	18.081	410	0.000
EC 4	E15& P15	-1.06	0.940	17.587	410	0.000
EC 5	E11& P11	-1.33	1.016	18.895	410	0.000

(Source: Primary data)

Table 5.3.36 shows the paired sample statistics was used to analyze the gap between customers' expectation and perception of employee commitment dimension pertaining to private sector banks. From the above table it is observed that there is a significant difference on all five statements of employee commitment dimension. Highest gap is 1.33for the statement EC5 i.e. employees of the bank inform the customers' as and when the work shall be done and the lowest gap is 0.73 for the statement EC2: employees of the bank are readily willing to help the customers. This implies that the customers are relatively more satisfied with the commitment of the employees who are ready to help the customers' to help do their work faster and better among the other statements of employee commitment dimension. Further it is also observed that there is significant difference in expectation and perception level of customers pertaining to employee commitment. Thus we accept the alternate hypothesis since the p-value is <0.05.

Table 5.3.37: Paired Sample Statistics to test the gap between the Customers Expectations and Perceptions for Private Sector Banks: Modern Services (MS)

Statements	Pairs	Mean	Std. Dev	t	df	P-value
MS 1	E31& P31	-0.72	-0.72	16.775	410	0.000
MS 2	E32& P32	-0.95	-0.737	16.290	410	0.000
MS 3	E33& P33	-1.00	-0.703	15.337	410	0.000
MS 4	E34& P34	-0.54	-0.543	11.523	410	0.000

MS 5	E35& P35	-0.46	-0.53	10.794	410	0.000

(Source: Primary data)

Table 5.3.37 shows the paired sample statistics was used to analyze the gap between customers' expectation and perception of modern services dimension pertaining to private sector banks. It is observed that there is a significant difference on all five statements of modern service dimension. The highest gap is 1.00 for the statement MS3 i.e. personal from time to time and the lowest gap is 0.46 for the statement MS5: bank modern banking facilities to customers. This implies that the customers are relatively more satisfied with the technology used by the bank for helping their customers' to transact with the bank from any part of the world and get their work done with ease among the other statements of modern services dimension. From the table it is observed that all statements pertaining to modern services shows significant difference on expectation and perception level of customers. Thus we accept the alternate hypothesis since the p-value is <0.05.

Table 5.3.38: Paired Sample Statistics to test the gap between the Customers Expectations and Perceptions for Private Sector Banks: Transaction Security (TS)

Statements	Pairs	Mean	Std. Dev	t	df	P-value
TS 1	E9& P9	-1.04	0.842	16.977	410	0.000
TS 2	E10& P10	-0.88	0.786	16.662	410	0.000
TS 3	E19& P19	-0.65	0.725	16.814	410	0.000

(Source: Primary data)

Table 5.3.38 shows the paired sample statistics was used to analyze the gap between customers' expectation and perception of transaction security dimension pertaining to private sector banks. It is observed that there is a significant difference in all three statements of transaction security dimension. The highest gap is 1.04 for the statement TS1 i.e. banks keeps its records accurate and up to date and the lowest gap is 0.65 for the statement TS3: transactions with the bank are safe and secure. This implies that the customers are relatively more satisfied with the safety and security of their funds among

the other statements of transaction security. From the table it is observed that all statements pertaining to transaction security shows significant difference in expectation and perception level of customers. Thus we accept the alternate hypothesis since the p-value is significant at 5%.

Table 5.3.39: Paired sample t-Test (Private sector banks)

	Paired differences		t	df	Sig(two tailed)
	Mean	Std. Dev			
Pair 1 EX-BI and PE-BI	3.35	2.588	26.210	410	0.000
Pair 2 EX-EA and PE-EA	4.39	2.955	30.081	410	0.000
Pair 3 EX-EC and PE-EC	5.32	3.263	33.634	410	0.000
Pair 4 EX-EE and PE-EE	5.62	3.681	30.915	410	0.000
Pair 5 EX-ET and PE-ET	6.38	4.476	28.862	410	0.000
Pair 6 EX-MS and PE-MS	3.67	2.839	26.175	410	0.000
Pair 7 EX-TS and PE-TS	2.57	2.073	25.103	410	0.000

(Source: Primary data)

Table 5.3.39 shows the paired sample t-test was used to analyze the gap between customers' expectation and perception of service quality on all seven dimensions pertaining to private sector banks. From the above table, it can be observed that gap exists between the expectation and perception level of the customers', which is significant in case of private sector banks since all p-values are <0.05. Therefore, the null hypothesis has been rejected and the alternate hypothesis is accepted since there is a significant difference in the expectation and perception level of the customers of private sector banks. From the mean analysis and hypothesis testing, gap exists in case of private sector banks which are found to be significant with respect to all the seven dimensions of service quality.

Figure 5b: Bar diagram showing service quality gaps among private sector banks:

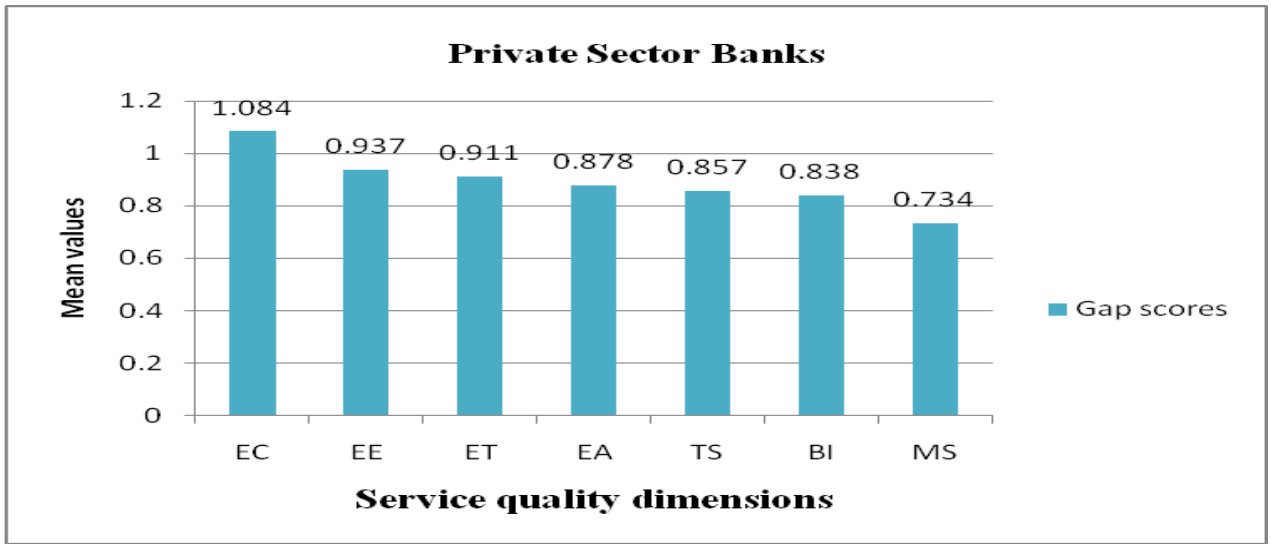

(Source: Primary data)

From the above bar graph 5b shows that gaps exists in all seven dimensions of service quality in case of private sector banks, the employee commitment and employee empathy dimensions shows highest gap, whereas modern services and bank infrastructure dimension has the smallest gap in case of private sector banks. Thus it can be said that private sector banks are performing better in terms of providing latest modern services and having a very good infrastructure to facilitate the customers, further they need to take steps to achieve trust and empathy towards their clients for a better future.

Descriptive Statistics and Paired Sample Statistics to test the gap between Customers expectations and perceptions across seven dimensions of service quality:

Multi-state cooperative sector banks:

Table 5.3.40: Descriptive Statistics of Bank infrastructure dimension of service quality

	Statements	Expectation (E)		Perception (P)		Gap Score (P-E)
Dimension		Mean	S.D	Mean	S.D	
BI 1	Materials related to the service (such as	4.16	0.62	2.99	0.74	-1.17

	pamphlets or brochures) are visually appealing.					
BI 2	Employees of the bank are well dressed and appear neat.	4.22	0.63	3.13	0.89	-1.09
BI 3	Infrastructural facilities in the bank are visually appealing.	4.30	0.58	3.15	0.73	-1.14
BI 4	Bank has modern equipments for providing services.	4.28	0.90	3.37	1.09	-0.91

(Source: Primary data)

Table 5.3.40 shows the descriptive statistics of bank infrastructure dimension of service quality. It is observed that the infrastructure of the bank is visually appealing, which had the highest mean score; this indicates that customers expect the bank to have a good infrastructure and ambience for their convenience. The highest perception mean score and the lowest service quality gap was in terms of banks having modern equipments and necessary gadgets to provide better services, it also indicates that customers' are relatively satisfied with banks state of the art infrastructural facilities provided by the banks to facilitate them in a better way.

Table 5.3.41: Descriptive Statistics on employee approach dimension of service quality

	Statements	Expectation (E)		Perception (P)		Gap Score (P-E)
Dimen sion		Mean	Std. Dev	Mean	Std. Dev	
EA 1	Behaviour of employees of the bank instils confidence in the customers.	4.16	0.75	3.02	0.88	-1.14
EA 2	Employees of the bank are polite with you.	4.25	0.70	3.25	0.84	-0.99
EA 3	Employees of the bank have required knowledge to render services to customers.	4.10	0.71	3.17	0.85	-0.92
EA 4	Method of communication used by the bank employees suits the requirements of the customers	4.19	0.75	3.14	0.76	-1.05
EA 5	Customers of the bank are given individual attention.	4.21	0.72	3.12	0.84	-1.08

(Source: Primary data)

Table 5.3.41 shows the descriptive statistics of employee assurance dimension of service quality. The statement, employees of the bank should be polite yielded the highest mean score for expectation, which indicates that the customers' expect the employees to interact with them politely. The highest perception mean score and the lowest service quality gap was observed in the statement that employees have the required knowledge to render services, the customers perceived this aspect since they felt unless and until bank employee have enough knowledge they won't be in a position to properly handle and guide the customers'.

Table 5.3.42: Descriptive Statistics on employee commitment dimension of service quality

	Statements	Expectation (E)		Perception (P)		Gap Score (P-E)
Dimension		Mean	Std. Dev	Mean	Std. Dev	
EC 1	Employees of the bank are prompt in providing better services to the customers.	4.19	0.681	3.21	0.85	-0.98
EC 2	Employees of the bank are readily willing to help customers.	4.42	0.727	3.12	0.84	-1.31
EC 3	Employees of the bank are never hesitant to respond to customer's request.	4.22	0.740	2.96	0.88	-1.26
EC 4	Employees of the bank constantly communicate with the customers.	4.20	0.758	3.02	0.83	-1.18
EC 5	Employees of the bank inform customers as and when services are performed	4.20	0.678	2.92	0.87	-1.28

(Source: Primary data)

Table 5.3.42 shows the descriptive statistics of employee commitment dimension of service quality. The statement, employees are readily willing to help the customers' got highest expectation mean score, which implies that customers' of the banks expect the employees to help customers. Further the statement that the employees are prompt in

providing better services to customers had the highest perception score and the lowest service quality gap; this indicates that bank employees are proactive in delivering effective services to their clients in the bargain to satisfy them.

Table 5.3.43: Descriptive Statistics on employee empathy dimension of service quality

	Statements	Expectation (E)		Perception (P)		Gap Score (P-E)
Dimen sion		Mean	S.D	Mean	S.D	
EE 1	Employees are always willing to clear the doubts of the customers.	4.38	0.74	3.03	0.82	-1.35
EE 2	The bank employees respond positively to customer complaints.	4.20	0.69	3.03	0.87	-1.17
EE 3	The bank is open to complaints and criticism of the customers.	4.13	0.71	3.04	0.86	-1.08
EE 4	The bank understands specific needs of the customers.	4.18	0.73	3.24	0.80	-0.94
EE 5	Operating hours of the bank are convenient to the customers.	4.13	0.74	3.46	0.85	-0.67
EE 6	The bank employees have customers' best interest at heart.	4.08	0.75	2.96	0.84	-1.12

(Source: Primary data)

Table 5.3.43 shows the descriptive statistics of employee empathy dimension of service quality. The highest expectation mean was that the customers' expect the bank employees to clear their doubts as and when aroused, on the other hand the highest perception mean and the lowest service quality gap was that customers were very happy with the bank timings which were very flexible as per customer requirements.

Table 5.3.44: Descriptive Statistics on employee trust dimension of service quality

	Statements	Expectation (E)		Perception (P)		Gap Score (P-E)
Dimen sion		Mean	Std. Dev	Mean	Std. Dev	
ET 1	Bank employees avoid disclosing	4.19	0.71	3.22	1.00	-0.97

	information about the customer's transactions to others.					
ET 2	Employees of the bank give proper guidance to the customers.	4.09	0.70	3.27	0.76	-0.82
ET 3	Customers can trust employees of the bank.	4.15	0.70	3.42	0.78	-0.73
ET 4	Bank employees deliver services to customers as early as possible.	4.18	0.74	3.02	0.88	-1.16
ET 5	Bank employees show sincere interest in solving customer's problems.	4.08	0.74	2.99	0.90	-1.09
ET 6	Bank employees deliver the work within a stipulated time period as promised by them.	4.14	0.71	3.22	0.96	-0.92
ET 7	Employees of the bank give accurate presentation of services.	4.18	0.74	3.14	0.96	-1.04

(Source: Primary data)

Table 5.3.44 shows the descriptive statistics of bank infrastructure dimension of service quality. It is observed that customers' expect the employees of the bank not to disclose bank account information to outsiders; they expect to maintain high level of secrecy. The highest mean score perception and the lowest service quality gap is that customers' of the bank have complete faith and trust on the employees of the bank among the other statements.

Table 5.3.45: Descriptive Statistics on modern services dimension of service quality

	Statements	Expectation (E)		Perception (P)		Gap Score (P-E)
Dimension		Mean	Std. Dev	Mean	Std. Dev	
MS 1	The banker provides a wide range of modern services to the customers from time-to-time.	4.39	0.71	3.17	0.77	-1.22
MS 2	Bank offers user-friendly technological services to its customers.	4.28	0.72	3.12	0.80	-1.16
MS 3	Personal accounts are updated from time-to-time and can be accessed through internet and ATMs.	4.43	0.71	3.19	0.85	-1.24
MS 4	Bank website offers financial records	4.29	0.63	3.27	0.89	-1.01

	and information of customers.					
MS 5	Bank offers modern banking facilities to the customers 24*7 & hassle free	4.37	0.68	3.42	0.88	-0.94

(Source: Primary data)

Table 5.3.45 shows the descriptive statistics of modern services dimension of service quality. The customers of the bank expect personal accounts to be updated from time to time and can be accessed from ATM and bank website, on the other hand the highest perception mean and the lowest service quality gap was that, the banks are offering their customers with modern banking facilities to serve them better and do their work without physically coming to the bank.

Table 5.3.46: Descriptive Statistics on transaction security dimension of service quality

	Statements	Expectation (E)		Perception (P)		Gap Score (P-E)
Dimension		Mean	Std. Dev	Mean	Std. Dev	
TS 1	The bank keeps its records accurately and up-to-date.	4.09	0.72	3.02	0.86	-1.07
TS 2	Bank provides error free records and statements.	4.13	0.68	3.18	0.75	-0.95
TS 3	The transactions with your bank are safe and secure.	4.10	0.76	3.22	0.85	-0.88

(Source: Primary data)

Table 5.3.46 shows the descriptive statistics of transaction security dimension of service quality. The highest expectations mean score for the statement; bank should provide error free records and statements for the benefit of the customers'. Further it is observed that highest perception score and lowest service quality gap was for the statement that bank records and transactions are safe and secured, which is an important requirement from customers' point of view.

Table 5.3.47: Paired Sample Statistics to test the gap between the Customers Expectations and Perceptions for Multi-State Cooperative Sector Banks: Bank Infrastructure (BI)

Statements	Pairs	Mean	Std. Dev	t	df	P-value
BI 1	E1 & P1	-1.17	0.867	27.225	408	0.000
BI 2	E2 & P2	-1.09	0.946	23.245	408	0.000
BI 3	E3 & P3	-1.14	0.876	26.254	408	0.000
BI 4	E4 & P4	-0.91	0.912	20.130	408	0.000

(Source: Primary data)

Table 5.3.47 shows the paired sample statistics was used to analyze the gap between customers' expectation and perception of bank infrastructure dimension pertaining to cooperative sector banks. It is observed that there is a significant difference between the customers' expectations and perceptions of service quality in the cooperative sector banks regarding the bank infrastructure dimension. Thus we accept the alternate hypothesis since the p-value is <0.05.Further it is observed that there is a significant difference between the customers' expectations and perceptions of service quality in the cooperative sector banks as regards bank infrastructure dimension of service quality. The above table shows that the highest gap is 1.17 for the statement BI1 i.e. materials related to service are visually appealing and the lowest gap is 0.91 for the statement BI4: bank has modern equipments for providing services. This implies that the customers are relatively more satisfied with the modern facilities and gadgets offered by the banks among the other statements of bank infrastructure dimension.

Table 5.3.48: Paired Sample Statistics to test the gap between the Customers' Expectations and Perceptions for Multi-State Cooperative Sector Banks: Employee Approach (EA)

Statements	Pairs	Mean	Std. Dev	t	df	P-value
EA 1	E23& P23	-1.14	1.045	22.008	408	0.000
EA 2	E20& P20	-0.99	0.964	20.718	408	0.000
EA 3	E21& P21	-0.92	1.002	18.560	408	0.000
EA 4	E16& P16	-1.05	0.983	21.549	408	0.000
EA 5	E24& P24	-1.08	1.05	20.751	408	0.000

(Source: Primary data)

Table 5.3.48 shows the paired sample statistics was used to analyze the gap between customers' expectation and perception of employee approach dimension pertaining to cooperative sector banks. It is observed that there is a significant difference on all five statements of employee approach dimension. The highest gap is 1.14 for the statement EA1 i.e. behaviour of the employees creates confidence in the minds of the customers and the lowest gap is 0.92 for the statement EA3: bank employees have required knowledge to render services to the customers. This implies that the customers are relatively more satisfied with the fact that the employees of the have enough knowledge to deal with the customers' and guide them in a better way among the other statements of employee approach dimension. Further it is also observed that there is significant difference in expectation and perception level of customers pertaining to employee approach, thus we accept the alternate hypothesis since the p-value is <0.05.

Table 5.3.49: Paired Sample Statistics to test the gap between the Customers Expectations and Perceptions for Multi-State Cooperative Sector Banks: Employee Commitment (EC)

Statements	Pairs	Mean	Std. Dev	t	df	P-value
EC 1	E12& P12	-0.98	1.026	19.270	408	0.000
EC 2	E13& P13	-1.31	0.996	26.534	408	0.000
EC 3	E14& P14	-1.26	1.037	24.513	408	0.000
EC 4	E15& P15	-1.18	1.035	23.001	408	0.000
EC 5	E11& P11	-1.28	1.084	23.822	408	0.000

(Source: Primary data)

Table 5.3.49 shows the paired sample statistics was used to analyze the gap between customers' expectation and perception of employee commitment dimension pertaining to cooperative sector banks. It is observed that there is a significant difference in all five statements of employee commitment dimension. Highest gap is 1.31 for the statement EC2 i.e. employees of the bank are readily willing to help the customer and the lowest gap is 0.98 for the statement EC1: bank employees are prompt in delivering services to their customers. This implies that the customers are relatively more satisfied with the fact that the bank employees are prompt in rendering services to the customer

which is very required to keep the client's satisfied among other statements of employee commitment dimension. It is also observed that there is significant difference in expectation and perception level of customers pertaining to employee commitment, thus we accept the alternate hypothesis since the p-value is <0.05.

Table 5.3.50: Paired Sample Statistics to test the gap between the Customers Expectations and Perceptions for Multi-State Cooperative Sector Banks: Employee Empathy (EE)

Statements	Pairs	Mean	Std. Dev	t	df	P-value
EE 1	E29& P29	-1.35	1.056	25.791	408	0.000
EE 2	E28& P28	-1.17	1.042	22.652	408	0.000
EE 3	E27& P27	-1.08	1.037	21.011	408	0.000
EE 4	E26& P26	-0.94	1.076	17.624	408	0.000
EE 5	E25& P25	-0.67	1.023	13.213	408	0.000
EE 6	E30& P30	-1.12	1.069	21.137	408	0.000

(Source: Primary data)

Table 5.3.50 shows the paired sample statistics was used to analyze the gap between customers' expectation and perception of employee empathy dimension pertaining to cooperative sector banks. It is observed that there is a significant difference on all six statements of employee empathy dimension. The highest gap is 1.35 for the statement EE1 i.e. employees are always willing to clear the doubts of the customers and the lowest gap is 0.67 for the statement EE5: operating hours are convenient to customers. This implies that the customers are relatively more contended that the banks are operating late evening and also are open on Sundays for the benefit of the customers' as they are unable to visit the bank during week days among the other statements of employee empathy dimension. From the table it is observed that all statements pertaining to employee empathy shows significant difference in expectation and perception level of customers. Thus we accept the alternate hypothesis since the p-value is <0.05.

Table 5.3.51: Paired Sample Statistics to test the gap between the Customers Expectations and Perceptions for Multi-State Cooperative Sector Banks: Employee Trust (ET)

Statements	Pairs	Mean	Std. Dev	t	df	P-value
ET 1	E5& P5	-0.97	1.11	17.630	408	0.000
ET 2	E18& P18	-0.82	0.99	16.710	408	0.000
ET 3	E17& P17	-0.73	0.931	15.819	408	0.000
ET 4	E8& P8	-1.16	1.114	21.007	408	0.000
ET 5	E7& P7	-1.09	1.126	19.529	408	0.000
ET 6	E6& P6	-0.92	1.193	15.558	408	0.000
ET 7	E22& P22	-1.04	1.129	18.584	408	0.000

(Source: Primary data)

Table 5.3.51 shows the paired sample statistics was used to analyze the gap between customers' expectation and perception of employee trust dimension pertaining to cooperative sector banks. It is observed that there is a significant difference on all seven statements of employee trust dimension, wherein the highest gap score of 1.16 for the statement ET4 i.e. bank employees deliver services to the customers as early as possible and the lowest gap is 0.73 for the statement ET3: customers can trust the employees of the bank. This implies that the customers are relatively more satisfied with the trust and faith on the employees, which they feel is very relevant to have good relationship with the banks than other statements of employee trust dimension. Further it is observed that all statements pertaining to employee trust show significant difference in expectation and perception level of customers, thus we accept the alternate hypothesis since the p-value is significant at 5%.

Table 5.3.52: Paired Sample Statistics to test the gap between the Customers Expectations and Perceptions for Multi-State Cooperative Sector Banks: Modern Services (MS)

Statements	Pairs	Mean	Std. Dev	t	df	P-value
MS 1	E31& P31	-1.22	1.012	24.321	408	0.000

MS 2	E32& P32	-1.16	1.02	22.943	408	0.000
MS 3	E33& P33	-1.24	0.926	27.015	408	0.000
MS 4	E34& P34	-1.01	1.032	19.744	408	0.000
MS 5	E35& P35	-0.94	1.024	18.519	408	0.000

(Source: Primary data)

Table 5.3.52 shows the paired sample statistics was used to analyze the gap between customers' expectation and perception of modern services dimension pertaining to cooperative sector banks. It is observed that there is a significant difference in all five statements of modern service dimension. The highest gap is 1.24 for the statement MS3 i.e. personal accounts are updated from time to time and can be accessed through ATM and website and the lowest gap is 0.94 for the statement MS5: banks offer modern facilities to customer. This implies that the customers are relatively more satisfied with new technologies and apps introduced by the banks, helping them save time and efforts among the other statements of modern services dimension. From the table it is observed that all statements pertaining to modern services shows significant difference on expectation and perception level of customers, thus we accept the alternate hypothesis since the p-value is <0.05.

Table 5.3.53: Paired Sample Statistics to test the gap between the Customers Expectations and Perceptions for Multi-State Cooperative Sector Banks: Transaction Security (TS)

Statements	Pairs	Mean	Std. Dev	t	df	P-value
TS 1	E9& P9	-1.07	0.998	21.630	408	0.000
TS 2	E10& P10	-0.95	0.887	21.607	408	0.000
TS 3	E19& P19	-0.88	0.965	18.397	408	0.000

(Source: Primary data)

Table 5.3.53 shows the paired sample statistics was used to analyze the gap between customers' expectation and perception of transaction security dimension pertaining to cooperative sector banks. It is observed that there is a significant difference in all three statements of transaction security dimension. The highest gap is 1.07 for the statement

TS1 i.e. bank keeps its records accurately and up to date and the lowest gap is 0.88 for the statement TS3: transactions with your bank are safe and secure. This implies that the customers are relatively more satisfied with the banks that are ensuring safety and security of customer's funds among the other statements of transaction security. From the table it is observed that all statements pertaining to transaction security shows significant difference in expectation and perception level of customers, thus we accept the alternate hypothesis since the p-value is <0.05.

Table 5.3.54: Paired sample t-Test (Multi-state coop sector banks)

	Paired differences		**t**	**df**	**Sig(two tailed)**
	Mean	**Std. Dev**			
Pair 1 EX-BI and PE-BI	4.31	2.539	34.288	408	0.000
Pair 2 EX-EA and PE-EA	5.18	3.472	30.136	408	0.000
Pair 3 EX-EC and PE-EC	6.01	3.591	33.806	408	0.000
Pair 4 EX-EE and PE-EE	6.33	3.932	32.518	408	0.000
Pair 5 EX-ET and PE-ET	6.73	4.898	27.754	408	0.000
Pair 6 EX-MS and PE-MS	5.57	3.151	35.706	408	0.000
Pair 7 EX-TS and PE-TS	2.9	2.056	28.491	408	0.000

(Source: Primary data)

Table 5.3.54 shows the paired sample t-test was used to analyze the gap between customers' expectation and perception of service quality on all seven dimensions pertaining to multi-state cooperative sector banks. From the above table, it can be observed that gap exists between the expectation and perception level of the customers', which is significant in cooperative sector banks since all p-values are <0.05. Therefore, the null hypothesis has been rejected and the alternate hypothesis is accepted since there is a significant difference in the expectation and perception level of the customers of multi-state cooperative sector banks.. From the mean analysis and hypothesis testing, gap exists in case of cooperative sector banks, which are found to be significant with respect to all the seven dimensions of service quality.

Figure 5c: Bar diagram showing service quality gaps among multi-state coop sector banks:

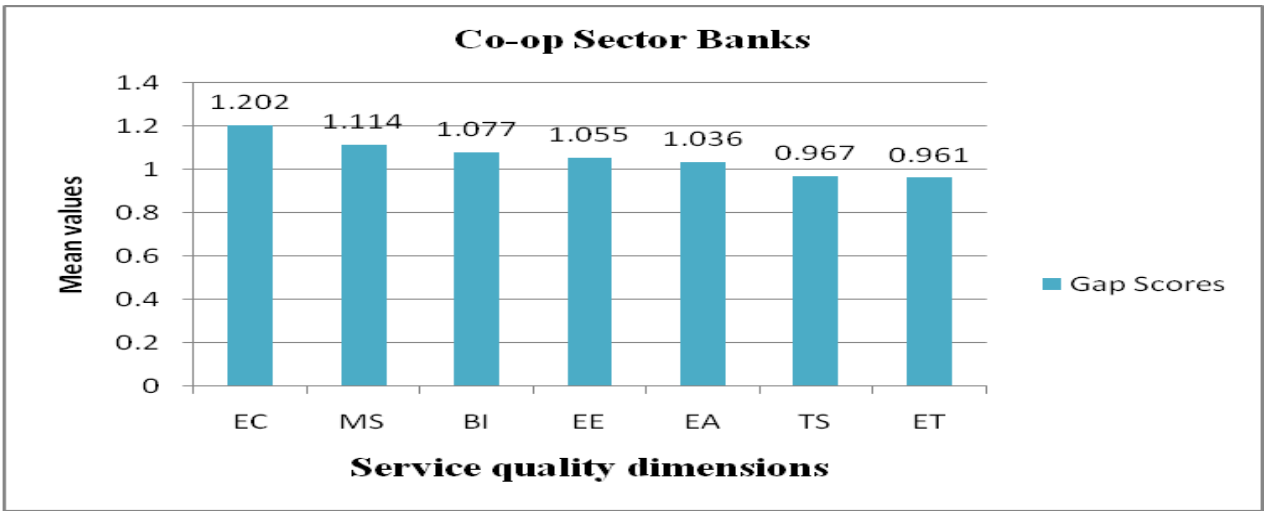

(Source: Primary data)

From the above bar graph 5c shows that gaps exists on all seven dimensions of service quality in case of multi-state cooperative sector banks, the dimension of employee commitment and modern services shows highest gap, whereas the dimensions employee trust and transaction security has the smallest gap in case of multi state cooperative sector banks. Thus it can be said that cooperative sector banks employees have developed enough trust in the minds of their clients and ensures high level of transaction security, whereas on the other hand they to work upon high commitment levels towards their clients and make efforts to improve upon modern services and equipments to better facilitate the customers' and satisfy them.

Hypothesis:

H2→ There is a significant difference in the customer satisfaction pertaining to various services offered by public, private and multi state cooperative banks.

Table 5.3.55: One way Anova to test the satisfaction level of the customers pertaining to credit cards offered by public, private and multi-state cooperative banks

Banks	Mean	SD	ANOVA	Scheffe's Test (p= <0.05)

			F	P-value	
Public sector	3.65	1.24	11.331	.000*	Public < Private, Private >Cooperative
Private sector	3.96	0.88			
Multi-state cooperative sector	3.76	1.03			

(Source: Primary data)

*indicates significance at 0.01 level

As per table 5.3.55 one way Anova was done between groups to find out the satisfaction level of the bank customers pertaining to service related to credit card facility offered by public, private and multi-state cooperative banks. The Post hoc Scheffe's test was performed to find significant differences between pairs of various sectors of the banks. The results of one way Anova indicate that statistically significant difference exists in the satisfaction levels of the customers pertaining to all categories of banks pertaining to credit card facility offered, since the p-value is <0.01 percent level of significance, thus we accept the alternate hypothesis. From the above table it can be inferred that the satisfaction levels of the customers of public sector banks was significantly lower as compared to customers of private sector banks with regard to credit card facility and satisfaction level of the customers of private sector banks was significantly higher as compared to customers of cooperative sector banks.

Table 5.3.56: One way Anova to test the satisfaction level of the customers pertaining to debit cards offered by public, private and multi-state cooperative banks

Banks	**Mean**	**SD**	**ANOVA**		**Scheffe's Test (p= <0.05)**
			F	**P-value**	
Public sector	3.93	0.89	22.049	.000*	Public > Private, Private >Cooperative
Private sector	3.85	0.96			
Multi-state cooperative sector	3.65	0.96			

(Source: Primary data)
*indicates significance at 0.01 level

As per table 5.3.56 one way Anova was done between groups to find out the satisfaction level of the bank customers pertaining to service related to debit card facility offered by public, private and multi-state cooperative banks. The Post hoc Scheffe's test was performed to find significant differences between pairs of various sectors of the banks. The results of one way Anova indicate that there is statistically significant difference in the satisfaction levels of the customers pertaining to all categories of banks as regards debit card facility offered, since the p-value is <0.01 percent level of significance, thus we accept the alternate hypothesis. From the above table it can be inferred that the satisfaction levels of the customers of public sector banks was significantly higher as compared to customers of private sector banks with regard to debit card facility and satisfaction level of the customers of private sector banks was significantly higher as compared to customers of cooperative sector banks.

Table 5.3.57: One way Anova to test the satisfaction level of the customers pertaining to ATM facility offered by public, private and multi-state cooperative banks

Banks	Mean	SD	ANOVA		Scheffe's Test (p= <0.05)
			F	P-value	
Public sector	3.94	0.94	16.172	.000*	Public > Private, Cooperative Private > Cooperative
Private sector	3.82	0.94			
Multi-state cooperative sector	3.73	1.07			

(Source: Primary data)

*indicates significance at 0.01 level

As per table 5.3.57 one way Anova was done between groups to find out the satisfaction level of the bank customers pertaining to service related to ATM facility offered by public, private and multi-state cooperative banks. The Post hoc Scheffe's test was performed to find significant differences between pairs of various sectors of the banks. The results of one way Anova indicate that there is statistically significant difference in the satisfaction levels of the customers pertaining to all categories of banks as regards ATM facility offered, since the p-value is <0.01 percent level of significance, thus we accept the alternate hypothesis. From the above table it can be inferred that the

satisfaction levels of the customers of public sector banks was significantly higher as compared to customers of private and cooperative sector banks with regard to ATM facility and was also observed that the satisfaction level of the customers of private sector banks was significantly higher as compared to customers of cooperative sector banks.

Table 5.3.58: One way Anova to test the satisfaction level of the customers pertaining to E-cheque facility offered by public, private and multi-state cooperative banks

Banks	Mean	SD	ANOVA		Scheffe's Test (p= <0.05)
			F	P-value	Private > Public , cooperative Public < Cooperative
Public sector	3.50	1.31	12.207	.000*	
Private sector	3.92	1.10			
Multi-state cooperative sector	3.79	1.33			

(Source: Primary data)
*indicates significance at 0.01 level

As per table 5.3.58 one way Anova was done between groups to find out the satisfaction level of the bank customers pertaining to service related to E-cheque facility offered by public, private and multi-state cooperative banks. The Post hoc Scheffe's test was performed to find significant differences between pairs of various sectors of the banks. The results of one way Anova indicate that there exists statistically significant difference in the satisfaction levels of the customers pertaining to all categories of banks as regards E-cheque facility offered, since the p-value is <0.01 percent level of significance, thus we accept the alternate hypothesis. From the above table it can be inferred that the satisfaction levels of the customers of private sector banks was significantly higher as compared to customers of public and cooperative sector banks with regard to e-cheque facility offered and was also observed that the satisfaction level of the customers of public sector banks was significantly lower as compared to customers of cooperative sector banks.

Table 5.3.59: One way Anova to test the satisfaction level of the customers pertaining to NEFT/RTGS facility offered by public, private and multi-state cooperative banks

Banks	Mean	SD	ANOVA		Scheffe's Test (p= <0.05)
			F	P-value	
Public sector	3.86	1.05	33.579	.000*	Public > cooperative, Private Private < Cooperative
Private sector	3.71	0.95			
Multi-state cooperative sector	3.81	1.09			

(Source: Primary data)
*indicates significance at 0.01 level

As per table 5.3.59 one way Anova was done between groups to find out the satisfaction level of the bank customers pertaining to service related to NEFT/RTGS facility offered by public, private and multi-state cooperative banks. The Post hoc Scheffe's test was performed to find significant differences between pairs of various sectors of the banks. The results of one way Anova indicate that there is statistically significant difference in the satisfaction levels of the customers pertaining to all categories of banks pertaining to NEFT/RTGS facility offered, since the p-value is <0.01 percent level of significance, thus we accept the alternate hypothesis . From the above table it can be inferred that the satisfaction levels of the customers of public sector banks was significantly higher as compared to customers of cooperative and private sector banks with regard to NEFT/RTGS facility and was also observed that the satisfaction level of the customers of private sector banks was significantly lower as compared to customers of cooperative sector banks.

Table 5.3.60: One way Anova to test the satisfaction level of the customers pertaining to telephone banking facility offered by public, private and multi-state cooperative banks

Banks	Mean	SD	ANOVA		Scheffe's Test (p= <0.05)
			F	P-value	
Public sector	3.19	1.22			Private >Public,

Private sector	3.71	1.03	21.83	.000*	Cooperative
Multi-state cooperative sector	3.54	1.18			Public < Cooperative

(Source: Primary data)
*indicates significance at 0.01 level

As per table 5.3.60 one way Anova was done between groups to find out the satisfaction level of the bank customers pertaining to service related to telephone banking facility offered by public, private and multi-state cooperative banks. The Post hoc Scheffe's test was performed to find significant differences between pairs of various sectors of the banks. The results of one way Anova indicate that there is a statistically significant difference between the satisfaction levels of the customers pertaining to all categories of banks as regards telephone banking facility offered, since the p-value is <0.01 percent level of significance, thus we accept the alternate hypothesis. From the above table it can be inferred that the satisfaction levels of the customers of private sector banks was significantly higher as compared to customers of public and cooperative sector banks with regard to telephone banking facility and further it was also observed that the satisfaction level of the customers of public sector banks was significantly lower as compared to customers of cooperative sector banks.

Table 5.3.61: One way Anova to test the satisfaction level of the customers pertaining to internet banking facility offered by public, private and multi-state cooperative banks

Banks	**Mean**	**SD**	**ANOVA**		**Scheffe's Test (p= <0.05)**
			F	**P-value**	
Public sector	3.73	1.13	23.379	.000*	Private >Public, Cooperative Public > Cooperative
Private sector	3.92	0.90			
Multi-state cooperative sector	3.57	1.16			

(Source: Primary data)
*indicates significance at 0.01 level

As per table 5.3.61 one way Anova was done between groups to find out the satisfaction level of the bank customers pertaining to service related to internet banking facility offered by public, private and multi-state cooperative banks. The Post hoc Scheffe's test was performed to find significant differences between pairs of various sectors of the

banks. The results of one way Anova indicate that there is statistically significant difference in the satisfaction levels of the customers pertaining to all categories of banks pertaining to internet banking facility offered, since the p-value is <0.01 percent level of significance, thus we accept the alternate hypothesis. From the above table it can be inferred that the satisfaction levels of the customers of private sector banks was significantly higher as compared to customers of public and cooperative sector banks with regard to internet banking facility and further it was also observed that the satisfaction level of the customers of public sector banks was significantly higher as compared to customers of cooperative sector banks.

Table 5.3.62: One way Anova to test the satisfaction level of the customers pertaining to mobile banking facility offered by public, private and multi-state cooperative banks

Banks	Mean	SD	ANOVA		Scheffe's Test (p= <0.05)
			F	P-value	
Public sector	3.96	1.15	16.093	.000*	Public > Private, Cooperative
Private sector	3.81	1.00			
Multi-state cooperative sector	3.65	1.14			

(Source: Primary data)
*indicates significance at 0.01 level

As per table 5.3.62 one way Anova was done between groups to find out the satisfaction level of the bank customers pertaining to service related to mobile banking facility offered by public, private and multi-state cooperative banks. The Post hoc Scheffe's test was performed to find significant differences between pairs of various sectors of the banks. The results of one way Anova indicate that there is statistically significant difference in the satisfaction levels of the customers pertaining to all categories of banks pertaining to mobile banking facility offered, since the p-value is <0.01 percent level of significance, thus we accept the alternate hypothesis. From the above table it can be inferred that the satisfaction levels of the customers of public sector banks was significantly higher as compared to customers of private and cooperative sector banks with regard to mobile banking facility

Table 5.3.63: One way Anova to test the satisfaction level of the customers pertaining to Demat facility offered by public, private and multi-state cooperative banks

Banks	Mean	SD	ANOVA		Scheffe's Test (p= <0.05)
			F	P-value	Public < Private, Private >Cooperative, Public > Cooperative
Public sector	3.83	1.51	7.994	.000*	
Private sector	3.96	1.20			
Multi-state cooperative sector	3.51	1.45			

(Source: Primary data)
*indicates significance at 0.01 level

As per table 5.3.63 one way Anova was done between groups to find out the satisfaction level of the bank customers pertaining to service related to Demat facility offered by public, private and multi-state cooperative banks. The Post hoc Scheffe's test was performed to find significant differences between pairs of various sectors of the banks. The results of one way Anova indicate that there is a statistically significant difference in the satisfaction levels of the customers pertaining to all categories of banks pertaining to Demat facility offered, since the p-value is <0.01 percent level of significance, thus we accept the alternate hypothesis. From the above table it can be inferred that the satisfaction levels of the customers of public sector banks was significantly lower as compared to customers of private sector banks with regard to Demat facility, the satisfaction level of the customers of private sector banks was significantly higher as compared to customers of cooperative sector banks and the satisfaction level of the customers of public sector banks was significantly higher as compared to customers of cooperative sector banks with regard to Demat facility.

5.4 Testing of Hypotheses

The first objective of the study comprised of two hypotheses, the first hypothesis was to test whether there is any significant difference in the service quality offered by the banks operating in public, private and multi-state cooperative sectors on customers expectation and perception level and further identify service quality gaps across all the sector of banks.

The second hypothesis of the study was to test whether there is any significant difference in the satisfaction level of customers as regards various services offered by public, private and multi-state cooperative banks. The sub hypotheses are as follows:

H2a→ There is a significant difference in the satisfaction levels of the customers pertaining to credit cards offered by public, private and multi state cooperative banks.

H2b→ There is a significant difference in the satisfaction levels of the customers pertaining to debit cards offered by public, private and multi state cooperative banks.

H2c→ There is a significant difference in the satisfaction levels of the customers pertaining to ATM facility offered by public, private and multi state cooperative banks.

H2d→ There is a significant difference in the satisfaction levels of the customers pertaining to E-cheques offered by public, private and multi state cooperative banks.

H2e→ There is a significant difference in the satisfaction levels of the customers pertaining to NEFT/RTGS offered by public, private and multi state cooperative banks.

H2f→ There is a significant difference in the satisfaction levels of the customers pertaining to tele banking facility offered by public, private and multi state cooperative banks.

H2g→ There is a significant difference in the satisfaction levels of the customers pertaining to internet banking facility offered by public, private and multi state cooperative banks.

H2h→ There is a significant difference in the satisfaction levels of the customers pertaining to mobile banking facility offered by public, private and multi state cooperative banks.

H2i→ There is a significant difference in the satisfaction levels of the customers pertaining to Demat facility offered by public, private and multi state cooperative banks.

5.5 Hypotheses testing results

In the case of the first hypothesis it is observed that the expectation level of the customers is higher as compared to their actual experience on all dimensions of service quality in case of public, private and multi-state cooperative banks. It is also observed

that the gap in the services offered by the banks is highest in the case of public sector banks followed by multi-state cooperative banks, whereas the least gap is observed in case of private sector banks. It is also observed that with regard to public sector banks, dimensions of bank infrastructure and modern services had maximum gap score, whereas in case of private sector banks it is observed that dimensions of employee commitment and employee empathy had maximum gap and in case of multi-state cooperative banks it was observed that the dimensions of employee commitment and modern services had maximum gap score. Thus it can be said that, there is significant difference in the quality of services offered by public, private and multi state cooperative banks since the p-value is <0.05

Thus we conclude that H1 is accepted since a significant difference is observed on all seven dimensions of service quality offered by public, private and multi state cooperative banks on expectation and perception level of the customers.

There is a statistically significant difference in the satisfaction level of the customers towards credit card facility offered by public, private sector and multi state cooperative banks since the p-value is <0.01.Thus we conclude that H2a is accepted.

In case of debit cards issued by public, private sector and multi state cooperative banks, it is observed that there is a statistically significant difference in the satisfaction level of the customers, since the p-value is <0.01.Thus we conclude that H2b is accepted.

A significant difference is observed in the satisfaction level of the customers pertaining to ATM facility offered by public, private sector and multi state cooperative banks since the p-value is <0.01. Thus it is concluded that H2c is accepted.

In the case of H2d pertaining to satisfaction level of the customers in case of E-cheque facility offered by public, private sector and multi state cooperative banks, it is observed that there is statistically significant difference, since the p value is <0.01, thus we conclude that H2d is accepted.

There is a statistically significant difference in the satisfaction level of the customers towards NEFT/RTGS facility offered by public, private sector and multi state cooperative banks since the p-value is <0.01.Thus we conclude that H2e is accepted.

In case of tele banking facility offered by public, private sector and multi state cooperative banks, it is observed that there is a statistically significant difference in the satisfaction level of the customers, since the p-value is <0.01.Thus we conclude that H2f is accepted.

A significant difference is observed in the satisfaction level of the customers pertaining to internet banking facility offered by public, private sector and multi state cooperative banks since the p-value is <0.01. Thus it is concluded that H2g is accepted.

In the case of H2h pertaining to satisfaction level of the customers towards mobile banking facility offered by public, private sector and multi state cooperative banks, it is observed that there is statistically significant difference, since the p value is <0.01, thus we conclude that H2h is accepted.

There is a statistically significant difference in the satisfaction level of the customers towards Demat facility offered by public, private sector and multi state cooperative banks since the p-value is <0.01.Thus we conclude that H2i is accepted.

Chapter Six

Relationship between service quality dimensions with customer satisfaction and customer loyalty

This chapter is based on the second objective which includes detailed analysis on the relationship between service quality dimensions with customer satisfaction and customer loyalty in public, private and multi-state cooperative banks and identifies the determining dimensions of service quality.

The success of the firm rendering service depends on high quality relationship with customers who help in determining customer satisfaction (Panda, 2003). Organisations operating in the service sector, which provides quality service and achieves customer satisfaction, are regarded to be the most relevant factors that could significantly affect the loyalty of the customer. Rendering high quality service shall lead to customer satisfaction and high level of customer satisfaction may lead to increased amount of customer loyalty, better profits and increased market share for the business (Rootman, 2006). Customer satisfaction is equally important for service organisations due to the fact that higher customer satisfaction shall lead to greater customer loyalty (Boulding et al., 1993) which in turn leads to future revenue. Thus it can be said that service quality and customer satisfaction are important antecedents that influence customer loyalty. In order to have a competitive advantage, service providers need to develop strategies and align their procedures to ensure high degree of service offered by the businesses that match with the expectations of the customer. This study seeks to determine the relationship between service quality dimensions with customer satisfaction and identify the most important dimensions of service quality across public, private and multi-state cooperative banks. In this chapter an analysis is made to study the relationship between service quality dimensions, customer satisfaction and customer loyalty, wherein the independent variables are the service quality dimensions and customer satisfaction and customer loyalty are the dependent variables.

6.1 Statistical techniques used

To test the relationship between service quality dimensions with customer satisfaction and customer loyalty multiple regression analysis was used to determine the dimensions

of service quality towards achievement of customer satisfaction and customer loyalty in public, private and multi-state cooperative banks.

6.2 Analysis of data

The analysis of the data was done based on the information gathered with the help of questionnaire from the customers of public, private and multi-state cooperative banks on service quality dimensions, customer satisfaction and customer loyalty.

Objective:

To evaluate the relationship between dimensions of service quality with satisfaction level of the customers and customer loyalty pertaining to public, private and multi-state cooperative banks and identify the most important dimensions of service quality.

Test of Multicollinearity

One of the assumptions for running a multiple regression model is that all the independent variables in the study should have no relation with each other. In case any dependency is found among the independent variables it is due to the problem of multicollinearity, thus the independent variables need to be linear to each other (Wilson & Keating., 2010).

Table 6.2.1: Multicollinearity Statistics

Independent variables	Tolerance	VIF
Bank infrastructure	0.31	3.226
Employee assurance	0.184	5.435
Employee empathy	0.195	5.132
Employee trust	0.196	5.09
Employee commitment	0.213	4.696
Modern services	0.25	3.998
Transaction security	0.293	3.407

(Source: Primary data)

From table 6.2.1 it is observed that the tolerance values of all the seven service quality dimensions are above 0.10 and further it is also observed that the variance inflation

factor (VIF) value for all dimensions of service quality is less than 10 (Burns & Bush, 2007), thus confirming that multicollinearity problem does not exist in the data set pertaining all three sectors of banks in case of independent variables.

Hypothesis

H3→ The dimensions of service quality have a significant relationship with customer satisfaction in case of public, private and multi state cooperative banks.

Table 6.2.2: Correlation matrix of service quality dimensions and customer satisfaction in public sector banks:

		BI	EA	EC	EE	ET	MS	TS
Customer satisfaction	Pearson Correlation	.219**	.250**	.288**	.309**	.361**	.185**	.286**
	Sig. (2-tailed)	.000	.000	.000	.000	.000	.000	.000
	N	409	409	409	409	409	409	409

(Source: Primary data)

**Correlation is significant at 1% (2-tailed)

From the table 6.2.2 it is observed that all seven service quality dimensions are significantly related to customer satisfaction in case of public sector banks. The table reveals that maximum correlation occurred between employee trust and customer satisfaction with the value of 0.361, followed by employee empathy with a value of 0.309, employee commitment is 0.288 and transaction security value of .286 followed by employee assurance with a value of .250, while modern services had the lowest value of 0..185. The correlation result indicate that service quality and customer satisfaction are positively correlated and this simply implies that better service quality enhance high level of customer satisfaction. However, it must be stated that the most critical service quality dimension that correlates with customer satisfaction according to above results is employee trust in case of public sector banks. Since the correlation results as per the table given above indicate that there is a relative relationship between employee trust and service quality in case of public sector banks.

Table 6.2.3: Multiple regression analysis to test the relationship between service quality dimensions and customer satisfaction in public sector banks:

	Independent variables		Dependent variable: Customer satisfaction	
Sr. No	**Dimensions**	**B**	**t - value**	**Sig**
	(Constant)	2.018	10.401	.000**
1	Bank Infrastructure	0.054	1.436	0.151
2	Employee Approach	0.044	1.521	0.129
3	Employee Commitment	0.005	0.192	0.847
4	Employee Empathy	0.071	3.104	.002**
5	Employee Trust	0.099	4.54	.000**
6	Modern Services	0.095	1.75	.080
7	Transaction Security	0.052	2.21	.027*
	Statistics	R^2 = .496 Adj R^2 = .478, F(7,401) = 25.925 P <=0.05		

(Source: Primary data)

*indicates significance at 5%, ** indicates significance at 1%

The regression equation for the above model is as follows:

$$CS = 2.018 + +0.054\ (BI) + 0.044\ (EA) + 0.005\ (EC) + 0.071\ (EE) + 0.099\ (ET) + 0.095\ (MS) + 0.052\ (TS)$$

As per table 6.2.3 multiple regression analysis is performed to know the effect of service quality dimensions with customer satisfaction of banks operating in the public sector. As per the results stated above, the independent variables were the seven dimensions of service quality; the dependent variable was customer satisfaction. The coefficient determination R^2 was .496 and the adjusted R^2 was .478. The seven factors of service quality dimension explain 48% variance in the customer satisfaction. The value of F test is 25.925 and is statistically significant at 5% level. From the regression results it is observed that there is significant relationship between service quality dimensions and customer satisfaction with respect to employee trust, employee empathy and transaction security since the p value is <0.05, whereas there is no significant relationship between service quality dimensions and customer satisfaction with respect

to bank infrastructure, employee approach, employee commitment and modern services since the p value is >0.05 in case of public sector banks.

Thus we accept the alternate hypothesis in respect of employee trust, employee empathy and transaction security and reject with respect to infrastructure, employee approach, employee commitment and modern services dimensions of service quality.

Further it is observed that the standardized beta coefficient which had the highest contribution towards customer satisfaction in the dimensions of employee trust β= 0.099, p value =.000, followed by employee empathy β= 0.071, p value =.002 and transaction security β= 0.052, p value =.027 were found to be statistically significant in case of banks operating in the public sector.

Table 6.2.4: Correlation matrix of service quality dimensions and customer satisfaction pertaining to private sector banks:

		BI	EA	EC	EE	ET	MS	TS
Customer satisfaction	Pearson Correlation	.602**	.583**	.549**	.562**	.520**	.611**	.579**
	Sig. (2-tailed)	.000	.000	.000	.000	.000	.000	.000
	N	411	411	411	411	411	411	411

(Source: Primary data)

**Correlation is significant at 1% (2-tailed)

From the table 6.2.4 it is observed that all seven service quality dimensions are significantly related to customer satisfaction in case of private sector banks. The table reveals that maximum correlation occurred between modern services and customer satisfaction with the value of 0.611, followed by bank infrastructure with a value of 0.602 and employee assurance is 0.583. The value of transaction security is .579 and employee empathy value of .562 followed by employee commitment with a value of .549, while employee trust had the lowest value of 0.520. The correlation results show that service quality and customer satisfaction are positively correlated in case of private sector banks and further implies that better service quality enhance high level of customer satisfaction. However, it must be stated that the most critical service quality

dimension that correlates with customer satisfaction according to above results is modern services in case of private sector banks.

Table 6.2.5: Multiple regression analysis to test the relationship between service quality dimensions and customer satisfaction in private sector banks:

	Independent variables		Dependent variable: Customer satisfaction	
Sr. No	**Dimensions**	**B**	**t - value**	**Sig**
	(Constant)	0.402	2.359	0.0188
1	Bank Infrastructure	0.097	3.657	0.000**
2	Employee Approach	0.032	1.125	0.261
3	Employee Commitment	0.032	1.341	0.181
4	Employee Empathy	0.002	0.078	0.938
5	Employee Trust	0.037	1.905	0.057
6	Modern Services	0.085	3.667	0.000**
7	Transaction Security	0.099	2.871	0.004**
	Statistics	R^2= .445 Adj R^2= .435, F(7,403)= 46.133 P <=0.05		

(Source: Primary data)

**indicates significant at 1%

The regression equation for the above model is as follows:

$$CS = .402 + +0.097\ (BI) + 0.032\ (EA) + 0.032\ (EC) + 0.002\ (EE) + 0.037\ (ET) + 0.085\ (MS) + 0.099\ (TS)$$

As per table 6.2.5 multiple regression analysis was performed to know the effect of service quality dimensions on the customer satisfaction of banks operating in the private sector. As per the results stated above, the independent variables were the seven dimensions of service quality; the dependent variable was customer satisfaction. The coefficient determination R^2 was .445 and the adjusted R^2 was .435.The seven factor of service quality dimension explained 43% variance in the customer satisfaction. The value of F test is 46.133 and is statistically significant at 5% level. From the regression results it is observed that there is significant relationship between service quality dimensions and customer satisfaction with respect to transaction security, bank infrastructure and modern services since the p value is <0.05, whereas there is no

significant relationship between service quality dimensions and customer satisfaction with respect to employee approach, employee commitment, employee empathy and employee trust since the p value is >0.05 in case of private sector banks.

Thus we accept the alternate hypothesis with respect to dimensions of transaction security, bank infrastructure and modern services and reject with respect to employee approach, employee commitment, employee empathy and employee trust dimensions of service quality.

Further it is observed that the standardized beta coefficient which had the highest contribution towards customer satisfaction in the dimensions of transaction security β= 0.099, p value =.000 followed by bank infrastructure β= 0.097, p value =.000 and modern services β= 0.071, p value =.004 were found to be statistically significant in the case of banks operating in the private sector.

Table 6.2.6: Correlation matrix of service quality dimensions and customer satisfaction pertaining to multi-state cooperative sector banks:

		BI	EA	EC	EE	ET	MS	TS
Customer satisfaction	Pearson Correlation	.325**	.325**	.315**	.348**	.296**	.320**	.363**
	Sig. (2-tailed)	.000	.000	.000	.000	.000	.000	.000
	N	409	409	409	409	409	409	409

(Source: Primary data)

**Correlation is significant at 1% (2-tailed)

The table 6.2.6 shows that all seven service quality dimensions are significantly related to customer satisfaction in case of multi-state cooperative sector banks. The table reveals that maximum correlation occurred between transaction security and customer satisfaction with the value of 0.363, this was followed by employee empathy with a value of 0.348, while employee assurance and bank infrastructure was equally valued at .325. The value of modern services was .320 while employee commitment had the lowest value of 0.315. The correlation results as per the above table shows that service

quality and customer satisfaction are positively correlated in case of multi-state cooperative banks and further implies that improved service quality helps in raising the satisfaction levels of the customers. However, it must be stated that the most critical service quality dimension that correlates with customer satisfaction is transaction security in the case of multi state cooperative sector banks.

Table 6.2.7: Multiple regression analysis to test the relationship between service quality dimensions and customer satisfaction in multi-state cooperative banks:

	Independent variables		**Dependent variable: Customer satisfaction**	
Sr. No	**Dimensions**	**B**	**t - value**	**Sig**
	(Constant)	0.924	3.418	0.001
1	Bank Infrastructure	0.035	1.289	0.198
2	Employee Approach	0.033	3.105	0.002**
3	Employee Commitment	0.015	0.621	0.535
4	Employee Empathy	0.039	1.674	0.095
5	Employee Trust	0.053	2.685	.007**
6	Modern Services	0.019	0.802	0.423
7	Transaction Security	0.096	2.573	0.010*
	Statistics	R^2= .460 Adj R^2= .445, F(7,401)= 31.884 P <=0.05		

(Source: Primary data)

*indicates significance at 5%, **indicates significance at 1%

The regression equation for the above model is as follows:

$$CS = 0.924 + +0.035\ (BI) + 0.033\ (EA) + 0.015\ (EC) + 0.039\ (EE) + 0.053\ (ET) + 0.019\ (MS) + 0.096\ (TS)$$

As per table 6.2.7 multiple regression analysis was performed to know the effect of service quality dimensions on the customer satisfaction of banks operating in the cooperative sector. As per the results stated above, the independent variables were the seven dimensions of service quality; the dependent variable was customer satisfaction. The coefficient determination R^2 was .460 and the adjusted R^2 was .445. The seven factor of service quality dimension explained 44% variance in the customer satisfaction.

The value of F test is 31.884 and is statistically significant at 5% level. From the regression results it is observed that there is significant relationship between service quality dimensions and customer satisfaction with respect to transaction security, employee trust and employee approach since the p value is <0.05, whereas there is no significant relationship between service quality dimensions and customer satisfaction with respect to bank infrastructure, employee commitment, employee empathy and modern services since the p value is >0.05 in case of multi state cooperative banks.

Thus we accept the alternate hypothesis with respect to dimensions of transaction security; employee trust and employee approach and reject with respect to infrastructure, employee commitment, employee empathy and modern services dimensions of service quality.

Further it is observed that the standardized beta coefficient which had the highest contribution towards customer satisfaction in the dimensions of transaction security β= 0.096, p value =.010 followed by employee trust β= 0.053, p value =.007 and employee approach β= 0.033, p value =.002 were found to be statistically significant at 5% level in case of banks operating in the multi state cooperative sector.

Hypothesis

H4→ The dimensions of service quality have a significant relationship with customer loyalty in case of public, private and multi state cooperative banks.

Table 6.2.8: Correlation matrix of service quality dimensions and customer loyalty pertaining to public sector banks:

		BI	EA	EC	EE	ET	MS	TS
Customer loyalty	Pearson Correlation	.589**	.586**	.623**	.594**	.625**	.548**	.538**
	Sig. (2-tailed)	.000	.000	.000	.000	.000	.000	.000
	N	409	409	409	409	409	409	409

(Source: Primary data)

**Correlation is significant at 1% (2-tailed)

From table 6.2.8 it is observed that all seven service quality dimensions are significantly related to customer loyalty in case of public sector banks. The table reveals that maximum correlation occurred between employee trust and customer satisfaction with the value of 0.625, followed by employee commitment with a value of 0.623 and employee empathy is 0.594. The value of bank infrastructure is .589 and employee assurance value of .586 followed by modern services with a value of .548, while transaction security had the lowest value of 0.538. The correlation results in above table shows that service quality and customer loyalty are positively correlated and this simply implies that better service quality helps in raising customer loyalty towards the banks. However, it must be stated that the most critical service quality dimension that correlates with customer loyalty according to above results is employee trust in the case of public sector banks.

Table 6.2.9: Multiple regression analysis to test the relationship between service quality dimensions and customer loyalty in public sector banks:

	Independent variables		**Dependent variable: Customer Loyalty**	
Sr. No	**Dimensions**	**B**	**T- value**	**Sig**
	(Constant)	1.438	11.322	0.000
1	Bank Infrastructure	0.04	1.73	0.084
2	Employee Approach	0.001	0.04	0.968
3	Employee Commitment	0.046	1.81	0.071
4	Employee Empathy	0.018	1.198	0.232
5	Employee Trust	0.035	2.663	0.008**
6	Modern Services	0.006	1.28	0.201
7	Transaction Security	0.032	1.319	0.188
	Statistics	R^2= .424 Adj R^2= .414, F(7,401)= 42.101 P <=0.05		

(Source: Primary data)

**indicates significant at 1%

The regression equation for the above model is as follows:

$$CL = 1.438 + +0.040\ (BI) + 0.001\ (EA) + 0.046\ (EC) + 0.018\ (EE) + 0.035\ (ET) + 0.006\ (MS) + 0.032\ (TS)$$

As per table 6.2.9 multiple regression analysis was performed to know the effect of service quality dimensions on the customer loyalty of banks operating in the public sector. As per the results stated above, the independent variables were the seven dimensions of service quality; the dependent variable was customer loyalty. The coefficient determination R^2 was .424 and the adjusted R^2 was .414. The seven factor of service quality dimension explained 41% variance in the customer loyalty. The value of F test is 42.101 and is statistically significant at 5% level. From the regression results it is observed that there is significant relationship between service quality dimensions and customer loyalty with respect to employee trust since the p value is <0.05, whereas there is no significant relationship between service quality dimensions and customer loyalty with respect to bank infrastructure, employee approach, employee empathy, employee commitment, transaction security and modern services since the p value is >0.05 in case of public sector banks.

Thus we accept the alternate hypothesis with respect to dimensions of employee trust and reject with respect to bank infrastructure, employee approach, employee empathy, employee commitment, transaction security and modern services dimensions of service quality.

Further it is observed that the standardized beta coefficient which had contribution towards customer loyalty in the dimensions of employee trust β= 0.035, p value = .008 was found to be statistically significant in case of banks operating in the public sector.

Table 6.2.10: Correlation matrix of service quality dimensions and customer loyalty pertaining to private sector banks:

		BI	EA	EC	EE	ET	MS	TS
Customer loyalty	Pearson Correlation	.627**	.547**	.575**	.588**	.611**	.566**	.607**
	Sig. (2-tailed)	.000	.000	.000	.000	.000	.000	.000
	N	411	411	411	411	411	411	411

(Source: Primary data)

**Correlation is significant at 1% (2-tailed)

The table 6.2.10 shows that all seven service quality dimensions are significantly related to customer loyalty in case of private sector banks. The table reveals that maximum correlation occurred between bank infrastructure and customer loyalty with the value of 0.627, this was followed by employee trust with a value of 0.611 and transaction security is 0.607. The value of employee empathy is .588 and employee commitment value of .575 followed by modern services with a value of .566, while employee assurance had the lowest value of 0547. The correlation results in above table shows that service quality and customer loyalty are positively correlated and this simply implies that better service quality enhance high level of customer loyalty. However, it must be stated that the most critical service quality dimension that correlates with customer satisfaction according to above results is bank infrastructure in the case of private sector banks.

Table 6.2.11: Multiple regression analysis to test the relationship between service quality dimensions and customer loyalty in private sector banks:

	Independent variables		**Dependent variable: Customer Loyalty**	
Sr. No	**Dimensions**	**B**	**T- value**	**Sig**
	(Constant)	1.57	13.076	0.000
1	Bank Infrastructure	0.052	1.84	0.067
2	Employee Approach	0.038	1.61	0.108
3	Employee Commitment	0.01	0.785	0.433
4	Employee Empathy	0.023	2.02	0.044*
5	Employee Trust	0.024	1.44	0.151
6	Modern Services	0.014	2.22	0.027*
7	Transaction Security	0.064	1.64	0.102
	Statistics	R^2= .469 Adj R^2= .460, F(7,401)= 50.8 P <=0.05		

(Source: Primary data)

*indicates significant at 5%

The regression equation for the above model is as follows:

$$CL = 1.57 + +0.052\ (BI) + 0.038\ (EA) + 0.010\ (EC) + 0.023\ (EE) + 0.024\ (ET) + 0.014\ (MS) + 0.064\ (TS)$$

As per table 6.2.11 multiple regression analysis was performed to know the effect of service quality dimensions on the customer loyalty of banks operating in the public sector. As per the results stated above, the independent variables were the seven dimensions of service quality; the dependent variable was customer loyalty. The coefficient determination R^2 was .469 and the adjusted R^2 was .460. The seven factor of service quality dimension explained 46% variance in the customer loyalty. The value of F test is 50.08 and is statistically significant at 5% level. From the regression results it is observed that there is significant relationship between service quality dimensions and customer loyalty with respect to employee empathy and modern services since the p value is <0.05, whereas there is no significant relationship between service quality dimensions and customer loyalty with respect to bank infrastructure, employee approach, employee commitment, employee trust and transaction security since the p value is >0.05 in case of private sector banks.

Thus we accept the alternate hypothesis with respect to dimensions of employee empathy and modern services and reject with respect to bank infrastructure, employee approach, employee commitment, employee trust and transaction security dimensions of service quality.

Further it is observed that the contribution towards customer loyalty in the dimensions of employee empathy β= .023, p value = 0.044 and modern services β= .014, p value = 0.027 were found to be statistically significant in the case of banks operating in the private sector.

Table 6.2.12: Correlation matrix of service quality dimensions and customer loyalty pertaining to multi-state cooperative sector banks:

		BI	EA	EC	EE	ET	MS	TS
Customer	Pearson Correlation	.262**	.228**	.248**	.348**	.213**	.234**	.335**

loyalty	Sig. (2-tailed)	.000	.000	.000	.000	.000	.000	.000
	N	409	409	409	409	409	409	409

(Source: Primary data)

**Correlation is significant at 1% (2-tailed)

The table 6.2.12 shows that all seven service quality dimensions are significantly related to customer loyalty in case of cooperative sector banks. The table reveals that maximum correlation occurred between employee empathy and customer loyalty with the value of 0.348, this was followed by transaction security with a value of 0.335 and bank infrastructure with a value 0.262. The value of employee commitment is .248 and modern services with a value of .234 followed by employee assurance with a value of .228, while modern services had the lowest value of 0.213. The correlation results in above table shows that service quality and customer loyalty are positively correlated and further implies that better service quality helps in enhancing loyalty among customers' of the banks. However, it must be stated that the most critical service quality dimension that correlates with customer loyalty according to above results is employee empathy in the case of multi state cooperative sector banks.

Table 6.2.13: Multiple regression analysis to test the relationship between service quality dimensions and customer loyalty in multi-state cooperative banks:

	Independent variables		**Dependent variable: Customer Loyalty**	
Sr. No	**Dimensions**	**B**	**T- value**	**Sig**
	(Constant)	2.502	17.86	0.000
1	Bank Infrastructure	0.016	1.136	0.257
2	Employee Approach	0.032	2.227	0.027*
3	Employee Commitment	0.003	0.216	0.829
4	Employee Empathy	0.055	4.608	0.000**
5	Employee Trust	0.013	1.324	0.186
6	Modern Services	0.006	0.482	0.630
7	Transaction Security	0.075	1.88	0.061

	Statistics	R^2= .369 Adj R^2= .350, F(7,401)= 29.178 P <=0.05

(Source: Primary data)

*indicates significant at 5%, ** indicates significant at 1%

The regression equation for the above model is as follows:

$$CL = 2.502 + +0.016\ (BI) + 0.032(EA) + 0.003\ (EC) + 0.055\ (EE) + 0.013\ (ET) + 0.006\ (MS) + 0.075\ (TS)$$

As per table 6.2.13 multiple regression analysis was performed to know the effect of service quality dimensions on the customer loyalty of banks operating in the multi-state cooperative sector. As per the results stated above, the independent variables were the seven dimensions of service quality; the dependent variable was customer loyalty. The coefficient determination R^2 was .369 and the adjusted R^2 was .350. The seven factor of service quality dimension explained 35% variance in the customer loyalty. The value of F test is 29.178 and is statistically significant at 5% level. From the regression results it is observed that there is significant relationship between service quality dimensions and customer loyalty with respect to employee empathy and employee approach since the p value is <0.05, whereas there is no significant relationship between service quality dimensions and customer loyalty with respect to bank infrastructure, employee commitment, employee trust, modern services and transaction security since the p value is >0.05 in case of multi state cooperative sector banks.

Thus we accept the alternate hypothesis with respect to dimensions of employee empathy and employee approach and reject with respect to bank infrastructure, employee commitment, employee trust, modern services and transaction security dimensions of service quality.

Further it is observed that the contribution towards customer loyalty in the dimensions of employee empathy β= 0.055, p value = .000 and employee approach β= 0.032, p value = .027 were found to be statistically significant in the case of banks operating in the multi state cooperative sector.

6.3 Testing of Hypotheses

The second objective of the study comprises of two hypotheses.

The first hypothesis was to determine the relationship between dimensions of service quality with customer satisfaction in case of public, private and multi-state cooperative banks.

The second hypothesis was to identify the relationship between service quality dimensions with customer loyalty in case of public, private and multi-state cooperative banks.

6.4 Hypotheses testing results

The first hypothesis was to identify the relationship between service quality dimensions with customer satisfaction, from the study t is observed that in case of public sector banks dimensions of employee empathy, employee trust is significant since p-value is <0.01 and the dimension of transaction security is significant since the p-value is <0.05. In case of private sector banks the dimensions of bank infrastructure, modern services and transaction security were found to be significant, since p-value was <0.01, whereas in case of multi-state cooperative sector banks the dimensions of employee assurance, employee trust were found to be significant since p-value is <0.01 and the dimension of transaction security is also significant since the p-value is <0.05,

Thus in the case of H3 we conclude that the alternate hypothesis is accepted with respect to dimensions of employee empathy, employee trust and transaction security in case of public sector banks, the dimensions bank infrastructure, modern services and transaction security in case of private sector banks and the dimensions of employee assurance, employee trust and transaction security in case of multi state cooperative sector banks.

The second hypothesis was to identify the relationship between service quality dimensions with customer loyalty. It is observed that in case of public sector banks, the dimension of employee trust is found to be significant since p-value is <0.01, whereas in case of private sector banks the dimensions of employee empathy and modern services were significant, since the p-value is <0.05, and further in case of multi-state cooperative banks it is observed that the dimension of employee approach is significant

since p-value is <0.05 and the dimension of employee empathy is significant since the p-value is <0.01.

Thus in the case of H4 we conclude that the alternate hypothesis is accepted with respect to dimension of employee trust in case of public sector banks, the dimensions employee empathy and modern services in case of private sector banks and the dimensions of employee approach and employee empathy in case of multi state cooperative sector banks.

Chapter Seven

Relationship between demographic variables with satisfaction level of customers of the banks

This chapter is based on the third objective which includes detail analysis on the relationship between various demographic variables of the customers pertaining to public, private and multi-state cooperative banks and their level of satisfaction.

In a service oriented business the demographic factors play a very important role in determining the satisfaction of the customers, which could have an impact on the working of the institution. The demographics of the customer imply their profile that may have some impact or affiliation with the respective service provider. In order to remain competitive, survive and sustain in today's dynamic environment, all the organizations rendering services should focus on enhancing their diverse customer base having different demographical patterns like age, income, qualification, profession and so on. The service provides should fulfil their needs and requirements to maximize, to ensure customer satisfaction and loyalty, leading to profitability. In today's competitive banking business, customer satisfaction must be assured by the banks by focussing on various demographic patterns to gain strategic and competitive edge in the industry. This study takes into consideration different demographic factors of customers that create satisfaction to built satisfied customers which will lead to increased market share and higher profits across public, private and multi-state cooperative banks.

7.1 Statistical techniques used

The purpose of this objective is to evaluate the influence of demographic variables on satisfaction levels of the customers across public, private and multi-state cooperative sector bank, nine demographic variables were taken for the study which includes gender, residence, age, marital status, monthly income, qualification, occupation, frequency of visit and number of years being the customer of the bank. Frequency distribution and one way Anova was applied to know and understand which demographic variables in the study have significant relationship towards customer satisfaction of the respective banks.

7.2 Analysis of data

The analysis of the data gathered with the help of questionnaire from the customers of public, private and multi-state cooperative banks, using SPSS statistical package for research.

Objective:

To analyze the effect of demographic variables on the satisfaction level of the customers of public, private and multi-state cooperative banks

Hypothesis:

H5→ There is a significant association between demographic variables and satisfaction among customers of public private and multi state cooperative banks.

Table no. 7.2.1Frequency distribution of demographic profile of the respondents across public, private and multi-state cooperative sector banks

Respondents are regarded as an important ingredient for doing a primary data collection and further analyzing the profile of the bank customers should be done in detail to take further course of action by bank managements. Frequency distribution analysis was used to present the demographic variable information of the customers. The sample size consists of 1229 customers of Public, Private and multi-state cooperative sector banks. In order to provide quality service by the bankers and make effective policies in order to increase customer satisfaction and loyalty, it is required to study the customer profile as the customers are the pillars of any banking company.

Frequency distribution

Demographic Variables		Total		Public sector banks		Private sector banks		Multi-state coop sector banks	
		No.	%	No.	%	No.	%	No.	%
Gender	Male	680	55.3	256	62.6	239	58.2	185	45.2
	Female	549	44.7	153	37.4	172	41.8	224	54.8
	Rural	295	24.0	102	24.9	77	18.7	116	28.4

Residence	**Urban**	934	76.0	307	75.1	334	81.3	293	71.6
Age	**18-30yrs**	327	26.6	164	40.1	92	22.4	71	17.4
	30-40yrs	395	32.1	102	24.9	167	40.6	126	30.8
	40-50yrs	300	24.4	93	22.7	89	21.7	118	28.9
	50yrs & above	207	16.8	50	12.2	63	15.3	94	23.0
Marital status	**Married**	656	53.4	188	46.0	233	56.7	235	57.5
	Unmarried	479	39.0	188	46.0	146	35.5	145	35.5
	Divorcee	31	2.5	9	2.2	10	2.4	12	2.9
	Widow/er	63	5.1	24	5.9	22	5.4	17	4.2
Monthly Income	**>Rs10k**	255	20.7	73	17.8	57	13.9	125	30.6
	Rs10k to 25k	331	26.9	106	25.9	107	26.0	118	28.9
	Rs25k to 50k	371	30.2	124	30.3	141	34.3	106	25.9
	Rs50k to Rs1lac	203	16.5	79	19.3	78	19.0	46	11.2
	<Rs 1 lac	69	5.6	27	6.6	28	6.8	14	3.4
Qualification	**SSC**	40	3.3	2	0.5			38	9.3
	HSSC	329	26.8	152	37.2	85	20.7	92	22.5
	Graduation	353	28.7	93	22.7	123	29.9	137	33.5
	Post Graduation	369	30.0	125	30.6	147	35.8	97	23.7
	Professional	138	11.2	37	9.0	56	13.6	45	11.0
Occupation	**Govt**	330	26.9	126	30.8	121	29.4	83	20.3
	Pvt	432	35.2	127	31.1	147	35.8	158	38.6
	Housewife	86	7.0	16	3.9	28	6.8	42	10.3
	Business	159	12.9	42	10.3	53	12.9	64	15.6
	Student	120	9.8	59	14.4	29	7.1	32	7.8
	Professional	102	8.3	39	9.5	33	8.0	30	7.2
Frequency of visit	**Daily**	70	5.7	21	5.1	34	8.3	15	3.7
	Weekly	470	38.2	166	40.6	148	36.0	156	38.1
	Monthly	430	35.0	155	37.9	144	35.0	131	32.0
	Occasionally	204	16.6	55	13.4	66	16.1	83	20.3

	Rarely	55	4.5	12	2.9	19	4.6	24	5.9
No. of Years customer	**Less than 1 yr**	171	13.9	33	8.2	59	14.4	78	19.2
	1 to 5yrs	366	29.8	134	32.7	129	31.4	103	25.3
	5 to 10yrs	651	53.0	227	55.6	218	52.9	207	50.5
	10yrs & Above	40	3.3	14	3.5	5	1.3	21	5.1
Total		1229	100	409	100	411	100.0	409	100

(Source: Primary data)

The above table 7.2.1 gives details of descriptive statistics in case of demographic variable for public, private and multi-state cooperative banks. The total sample collected for the study was 1,251 bank customers, after scrutinizing the forms received, 22 forms were rejected since they were not complete in all regards and couldn't be taken for the study and thus 1,229 responses were finally taken for the study. From the total responses selected for the study 409 responses each pertained to public sector banks and cooperative sector banks and 411 responses from private sector banks. Out of the 1229 responses 675 responses were received with the help of Google forms and the balance 554 responses were personally collected by administering the questionnaire to bank customers. The total sample comprised of majority of male respondents as compared to female respondents. Three fourth of the respondents were residing in the urban areas (76%) whereas one fourth respondents were from rural areas (26%). Majority of the respondents were in the age group of 30- 40yrs (31%) followed by 18-30 years (26%), which clearly indicates that majority of the respondents are of lower age group. The entire sample is literate, wherein majority of respondents are post graduates (30%) followed by graduates (28%), those possessing HSSC qualification were 26%, respondents having professional degree were 11% and those who had passed their matriculation were 3%. As far as the monthly income of the respondents it was observed that almost one third of the respondents i.e.31% drew a monthly income between Rs25000 to Rs50000, followed by 27% respondents in the category of Rs10,000 to Rs25000, respondents with monthly income less than Rs10,000 were 20%, respondents earning a monthly income between Rs50,000 to Rs1lac were 16.5% and the respondents with a monthly salary of Rs1 lac and above were the least, it was also

observed that all respondents were having disposable income to transact with their respective banks and avail different services from time to time as per their requirements. With regard to occupation of the respondents more than one third were working in the private sector 35%, followed by 27% in the government sector, 13% of the respondents were having their own business, student 9.8%, professional 8.3% and the balance 7% were housewife, all these people had bank accounts in various banks and availing various services. As regards respondents physical visit to the bank branches it was observed that majority of them visit their banks on an average once a week 38%, followed by monthly visit 35%, occasionally 16%, 5.7% respondents visit banks daily for doing bank business and 4.5% visit their branch rarely, wherein it was observed that these people have either their long term fixed deposits, for which frequent visits are not required. Further with regard to respondents association with the respective banks, it was observed that more than half of the respondents' i.e.53% were associated with their banks for a period between 5 to 10 years, followed by respondents association between 1 to 5 years 29.8%, almost 14% of respondents had newly opened their bank accounts whereas 3.3% respondents association with their banks was above ten years.

Relationship between demographic variables and customer satisfaction:

Table 7.2.2 One way Anova to test the relationship between customer satisfaction and age of the customers of public, private and cooperative banks

Banks	**Age**				**One way Anova**		**Scheffe's Test (p= <0.05)**
	(1) 18-30yrs	(2) 30-40yrs	(3) 40-50yrs	(4) 50yrs & above	F	P-value	
Public	2.93	2.84	2.75	3.18	1.906	0.128	**NS**
Private	3.88	3.90	3.45	3.43	3.231	0.022*	1<2, 2>3,4
Coop	3.34	3.13	3.12	3.16	0.917	0.433	**NS**

(Source: Primary data) (NS- Not Significant)

*indicates significant at 5%

As per table 7.2.2 one way Anova was done between groups to find out the satisfaction levels of the bank customers as per their age groups in their respective categories of banks. The bank customers are divided into four groups, viz. age of the customers' between 18 to 30 years, 30 to 40 years, 40 to 50 years and above 50 years of age. Post Hoc Scheffe's test was used to give appropriate and detailed results. The results of one way Anova indicate that there was no significant difference between age of the customers and their satisfaction level in case of public sector banks and cooperative sector banks since the p value is not significant. Whereas in case of private sector banks it is observed that there is a significant difference in customers age and customer satisfaction level, the post hoc test conducted revealed that F statistics is significant, thus the satisfaction level of the respondents in the age groups between 18 to 30 years and between age groups of 30 to 40 years is higher as compared to other age groups and differ significantly since $p < 0.05$.

Table 7.2.3 One way Anova to test the relationship between customer satisfaction and gender of the customers of public, private and cooperative banks

Banks	Gender		One way Anova	
	Male	Female	F	Sig (p= <0.05)
Public	2.80	3.06	5.512	0.019*
Private	3.72	3.46	5.586	0.019*
Coop	3.06	3.25	3.946	0.048*

(Source: Primary data)

*indicates significant at 5%

As per table 7.2.3 one way Anova was done between groups to find out the satisfaction levels of the bank customers' as per their gender in their respective categories of banks. The bank customers' are divided into two groups, viz. male and female customers. The results of one way Anova above depicts the results of the test and it was observed that there is significant difference in the level of customer satisfaction of the bank customers' and gender across public, private and multi-state cooperative banks where the p value is less than 0.05 across all sectors of banks. From the above table it can be inferred that the satisfaction levels of the female customer is higher than male customers' in case of Public sector banks and Cooperative banks, whereas the

satisfaction level of the male customers is higher than female customers in case of Private sector banks. The post hoc test of Scheffe's could not be run since there were only two groups in respect of various categories of banks.

Table 7.2.4 One way Anova to test the relationship between customer satisfaction and residence of the customers of public, private and cooperative banks

Banks	**Residence**		**One way Anova**	
	Rural	Urban	F	Sig (p= <0.05)
Public	2.84	2.92	0.383	0.536
Private	3.32	3.68	6.303	0.012*
Coop	3.05	3.22	2.391	0.123

(Source: Primary data)

*indicates significant at 5%

As per table 7.2.4 one way Anova was done between groups to find out the satisfaction levels of the bank customers as per their stay/residence with respect to various categories of banks. The bank customers are divided into two groups, viz. rural and urban customers. The results of one way Anova indicate that the overall satisfaction level of customers residing in urban areas is far better as compared to customers residing in the rural areas. In case of private sector banks it is observed that there is significant difference in the satisfaction level of customers residing in urban and rural areas since p value is less than 0.05. Further it can be said that customers of private banks residing in urban centres are highly satisfied compared to rural customers. The post hoc test of Scheffe's could not be run since there were only two groups in respect of various categories of banks.

Table 7.2.5 One way Anova to test the relationship between customer satisfaction and marital status of the customers of public, private and cooperative banks

Banks	**Marital Status**				**One way Anova**		**Scheffe's Test (p= <0.05)**
	(1) Married	(2) Unmarried	(3) Divorcee	(4) Widow/er	F	P-value	

Public	2.90	2.91	2.67	2.83	0.187	0.905	**NS**
Private	3.65	3.66	2.90	3.18	2.641	0.051	**NS**
Coop	3.15	3.26	3.08	2.76	1.452	0.227	**NS**

(Source: Primary data) (NS- Not Significant)

The table 7.2.5 above gives details of one way Anova done between groups to find out the satisfaction levels of the bank customers' as per their marital status in their respective categories of banks. The bank customers' are divided into four groups, viz. married, unmarried, divorcee and widow/widower customers. Post Hoc Scheffe's test was used to give appropriate and detailed results. The results of one way Anova indicate that there is no significant difference with respect to satisfaction levels of the customers' and their marital status across public, private and cooperative banks as per the study, since p-value was greater than 0.05 level of confidence in all three sectors of banks.

Table 7.2.6 One way Anova to test the relationship between customer satisfaction and monthly income of the customers of public, private and cooperative banks

Banks	**Monthly Income**					**One way Anova**		**Scheffe's Test (p= <0.05)**
	(1) >Rs10k	(2) Rs10k to 25k	(3) Rs25k to 50k	(4) Rs50k to Rs1lac	(5) <Rs 1 lac	F	P-value	
Public	2.95	3.02	2.65	3.03	3.11	2.721	.029*	3< 4 & 3 < 5
Private	2.68	3.18	3.65	3.86	4.29	8.037	.000**	1< 2 ,2< 3 2< 4
Coop	3.18	3.09	3.31	2.96	3.29	1.382	.239	**NS**

(Source: Primary data) (NS- Not Significant)

*indicates significant at 5%, **indicates significant at 1%

As per table 7.2.6 One way Anova was done between groups to find out the satisfaction levels of the bank customers' as per their monthly income in their respective categories of banks. The bank customers' are divided into five groups, viz. income of the

customers' less than Rs10,000 between Rs.10,000 to Rs.25,000, between Rs25,000 to Rs50,000, between Rs50,000 to Rs 1lac and above Rs1lac. Post Hoc Scheffe's test was used to give appropriate and detailed results. The results of one way Anova indicate that there is no significant association between income earned by the respondents and their satisfaction level in case of multi-state cooperative banks, whereas there is significant association between income of respondents and the satisfaction level towards public and private sector banks since the p value is <0.05 level of significance, further it can be inferred that customers' in the higher income group are more satisfied as compared to respondents in the lower income group pertaining to public and private sector banks. In case of public sector banks respondents satisfaction level in the income group between Rs50k to Rs1Lac is higher as compared to respondents income group between Rs25k to Rs50k, similarly respondents satisfaction level in the income group of Rs1lac and more is higher compared to respondents in the income group between Rs25k to Rs50K. In case of private sector banks it is observed that the satisfaction level of the respondents in the income group between Rs 25K to Rs50k is higher than income group between Rs10k to Rs25K, similarly it is observed that the satisfaction level of the customer in the income group between Rs50K to Rs1Lac is higher than the income group between Rs 25K to Rs50k.

Table 7.2.7 One way Anova to test the relationship between customer satisfaction and educational qualification of the customers of public, private and cooperative banks

Banks	**Educational qualification**					**One way Anova**		**Scheffe's Test (p= <0.05)**
	(1) SSC	(2) HSSC	(3) Graduation	(4) Post Graduation	(5) Professional	F	P-value	
Public	2.00	2.91	3.02	2.99	2.27	4.265	.002**	2> 5,3> 5
Private	--	3.08	3.84	3.75	4.09	15.585	.000**	5>2, 3> 2

Coop	3.05	3.01	3.25	3.24	3.07	2.530	.040*	3>5,3>2

(Source: Primary data)

*indicates significant at 5%, ** indicates significant at 1%

From the table 7.2.7 given above One way Anova was done between groups to find out the satisfaction levels of the bank customers' as per their educational qualification in their respective categories of banks. The bank customers' are divided into five groups, viz. customers with SSC, HSSC, Graduation, Post Graduation and having professional degree. Post Hoc Scheffe's test was used to give appropriate and detailed results. The results of One way Anova indicate that there is significant relationship between educational qualification and the satisfaction level of respondents across all three sectors of banks. Overall from the above table it can be inferred that the satisfaction level of the respondents are higher across all three sector who have completed graduation and similar degree, in case of public sector banks it is observed that respondents who have passed their twelth standard are highly satisfied compared to professionals and graduates are also highly satisfied as compared to professionals. In case of private sector banks it is observed that graduates and professionals are highly satisfied with the service perceived as compared to respondents who have done their twelth, whereas incase of cooperative sector banks it is observed that graduates are highly satisfied as compared to respondents who have completed their twelth standard and respondents who are professionals.

Table 7.2.8 One way Anova to test the relationship between customer satisfaction and occupation of the customers of public, private and cooperative banks

Banks	**Occupation**						**One way Anova**		**Scheffe's Test (p= <0.05)**
	(1) Govt	(2) Pvt	(3) House wife	(4) Business	(5) Student	(6) Professional	F	P-value	
Public	2.92	2.95	2.50	2.81	2.86	2.97	0.632	0.675	**NS**

Private	3.83	3.44	3.50	3.86	3.79	3.91	2.884	0.014*	1>2, 4>1
Coop	3.28	3.09	3.00	3.09	3.31	3.50	1.591	0.161	**NS**

(Source: Primary data) (NS- Not Significant)

*indicates significant at 5%

As per table 7.2.8 one way Anova was done between groups to find out the satisfaction levels of the bank customers' as per their occupation in their respective categories of banks. The bank customers' are divided into six groups, viz. customers working in Govt, private, housewife, businessman, student and professional. Post Hoc Scheffe's test was used to give appropriate and detailed results. The results of one way Anova indicate that there was no significant relationship between occupation of the respondents and their satisfaction level across public and cooperative banks since the p value was above 0.05 level of significance. In case of private sector banks it was observed that there is significant relationship between occupation of the respondents and their satisfaction level, further it can be inferred that the satisfaction level of government servants is higher than respondents serving in the private sector and further the satisfaction level of businessman/women is much higher than respondents working in the government sector.

Table 7.2.9 One way Anova to test the relationship between customer satisfaction and frequency of visit of the customers of public, private and cooperative banks

Banks	**Frequency of visit**					**One way Anova**		**Scheffe's Test (p= <0.05)**
	(1) Daily	(2) Weekly	(3) Monthly	(4) Occasionally	(5) Rarely	F	P-value	
Public	3.05	2.86	2.93	2.85	3.08	0.314	0.869	**NS**
Private	3.80	3.87	3.91	2.98	3.21	11.064	.000**	2<1,4<2,4<3
Coop	2.40	3.39	3.26	2.78	3.04	8.793	.000**	1<2,1<3,4<

								2, 4<3

(Source: Primary data) (NS- Not Significant)

**indicates significant at 1%

As per table 7.2.9 One way Anova was done between groups to find out the satisfaction levels of the bank customers' as per their frequency of visit to their respective categories of banks. The bank customers' are divided into five groups, viz. customers' visiting daily, weekly, monthly, occasionally and rarely. Post Hoc Scheffe's test was used to give appropriate and detailed results. The results of one way Anova depicts that there is no significant relationship between frequency of visit of respondents to the bank and their satisfaction level in case of public sector banks since the p value is higher than 0.01 level of significance. In the case of private sector banks satisfaction level of respondents visiting the weekly and monthly is higher than the respondent visiting the bank on daily basis, similarly the satisfaction level respondents visiting the branch occasionally is higher than the respondents visiting the bank either weekly or monthly. In case of cooperative banks the satisfaction level of the respondents visiting the bank weekly or monthly is higher than those respondents visiting the bank on daily basis, similarly it can be also inferred that the satisfaction level of the respondents visiting the branch monthly is higher as compared to respondents visiting the branch occasionally.

Table 7.2.10 One way Anova to test the relationship between customer satisfaction and number of years being customers of public, private and cooperative banks

Banks	**No. of years**				**One way Anova**		**Scheffe's Test (p= <0.05)**
	(1) Less than 1 yr	(2) 1 to 5yrs	(3) 5 to 10yrs	(4) 10yrs & Above	F	P-value	
Public	2.14	2.38	2.39	2.50	0.465	0.707	**NS**
Private	4.05	3.79	3.75	4.50	0.703	0.552	**NS**
Coop	2.95	3.04	3.32	4.40	2.973	0.036*	1<4,2<4

(Source: Primary data) (NS- Not Significant)

*indicates significant at 5%

As per table 7.2.10 one way Anova was done between groups to find out the satisfaction levels of the bank customers' based upon number of years being customers' of respective categories of banks. The bank customers' are divided into four groups, viz. customer of the bank for less than 1 year, between 1 to 5 years, between 5 to 10 years and above ten years. Post Hoc Scheffe's test was used to give appropriate and detailed results. The results of one way Anova 7.2.10 depicts that there is no significant relationship between number of years of association with the bank the satisfaction levels of the respondents pertaining to public and private sector banks since the p-value is above the significance value of 0.05. In the case of cooperative sector banks it is observed that there is a significant relationship between no. of years of association with the bank and the satisfaction level of the respondents. In case of cooperative sector banks it can be said that the satisfaction level of the respondents was higher for those who have been with the bank for a period of 10 years and above as compared to respondent whose association with the bank was less than 1 year and respondents whose association with their bank was between 1 to 5 years.

7.3 Testing of Hypotheses

The third objective of the study comprised of only one hypothesis to test whether there was statistically any significant association between demographic variables and satisfaction levels of the customers across public private and multi-state cooperative banks. The results of the study indicated that there was a statistically significant association in the satisfaction level of bank customers across all three categories of banks on certain demographic factors, whereas no significant association between customers level of satisfaction was observed on some demographic factors. The sub hypotheses are as follows:

H5a→There is a significant association between age of the customer and satisfaction in case of public private and multi state cooperative banks.

H5b→There is a significant association between gender of the customer and satisfaction in case of public private and multi state cooperative banks.

H5c→There is a significant association between place of residence of the customer and satisfaction in case of public private and multi state cooperative banks.

H5d→There is a significant association between marital status of the customer and satisfaction in case of public private and multi state cooperative banks.

H5e→There is a significant association between income of the customer and satisfaction in case of public private and multi state cooperative banks.

H5f→There is a significant association between educational level of the customer and satisfaction in case of public private and multi state cooperative banks.

H5g→There is a significant association between occupation of the customer and satisfaction in case of public private and multi state cooperative banks.

H5h→There is a significant association between frequency of visit of the customer and satisfaction in case of public private and multi state cooperative banks.

H5i→There is a significant association between no. of years being customer and satisfaction in case of public private and multi state cooperative banks.

7.4 Hypotheses testing results

a. There is a statistically significant association between age of the customers and their satisfaction level in case of private sector bank since the p-value is <0.05, whereas no significant association is observed in case of public and cooperative banks pertaining to age of the customers and satisfaction level, since the p-value is >0.05 level of significance. Thus we conclude that H5a is accepted in case of private sector banks and rejected in case of public sector banks and multistate cooperative sector banks.

b. There also existed a statistically significant association between gender and customer level of satisfaction across public, private and cooperative banks since the p-value is significant at 5% level of confidence. Further it is observed that the satisfaction level of female customers was better, compared to male customers in case of public and cooperative banks, whereas the satisfaction level of male customers is better than female customers incase of private sector banks. Thus we conclude that H5b is accepted in case of public, private and multistate cooperative sector banks.

c. On the basis of residence of the customers, it is observed that there is a statistically significant association in case of private sector banks since p-value is <0.05, whereas in case of public and cooperative banks there is no statistically significant association since the p-value is <0.05. Thus we conclude that H5c is accepted in case of private sector banks and rejected in case of public sector banks and multistate cooperative sector banks.

d. On the basis of marital status of the customers, it is observed that there is no statistically significant association between marital status and satisfaction levels of the customers across public, private and cooperative bank since the p-value is >0.05. Thus we conclude that H5d is rejected in case of public, private and multistate cooperative sector banks.

e. As regards the satisfaction level of the customers against their income level, it is observed that there is a statistically significant association in case of public and private sector banks, since the p-value is <0.05. Whereas no significant association is observed in case of cooperative sector banks since the p-value is >0.05. Thus we conclude that H5e is accepted in case of public and private sector banks and rejected in case of multistate cooperative sector banks.

f. On the basis of educational qualification of the customers, there is a statistically significant association across all categories of banks, since the p-value is <0.05. Thus we conclude that H5f is accepted in case of public, private and multistate cooperative sector banks.

g. On the basis of occupation of the customers, there is a statistically significant association in case of private sector banks since the p-value is <0.05, whereas no significant association is observed incase of public and cooperative banks since the p-value is >0.05 level of significance. Thus we conclude that H5g is accepted in case of private sector banks and rejected in case of public sector banks and multistate cooperative sector banks.

h. With regard to frequency of visit of the customers to the banks and their satisfaction level, it is observed that there is a statistically significant association in case of private and multi state cooperative sector banks since the p-value is

<0.05, whereas no significant association is observed incase of public sector banks since the p-value is >0.05 level of significance. Thus we conclude that H5h is accepted in case of private and cooperative sector banks and rejected in case of public sector banks.

i. On the basis of number of years being customer of the respective banks and the satisfaction level of the customers, it is observed that there is a statistically significant association in case of private sector banks since the p-value is <0.05, whereas no significant association is observed incase of public and cooperative banks since the p-value is >0.05 level of significance. Thus we conclude that H5i is accepted in case of multistate cooperative sector banks and rejected in case of public and private sector banks.

Chapter Eight

Relationship between service quality and financial performance of the banks with its effects on customer satisfaction and customer loyalty

This chapter is based on the fourth objective which includes detail analysis on evaluating the financial performance of public, private and cooperative banks and to test the relationship among service quality, customer satisfaction, customer loyalty and financial performance of the banks under study.

Nowadays the commercial banks are spending a considerable amount of time and money to direct their plans and strategies towards achievement of customer satisfaction. Many researchers such as Winstanley (1997), Ehigie (2006) in their study have proved that customer satisfaction is a link between customer behaviours and their tendency to select his/her bank. Liang et al. (2009) in his research stated that loyalty is the most important factor in predicting customers' repetitive purchasing intentions. Further researchers observed that customer satisfaction affects customer loyalty which in turn leads to profitability (Hallowell, 1996). Chi and Gursoy (2009) in their study stated that a satisfied customer turns into a loyal one and a loyal customer, in time, will lead to higher sales and therefore higher financial returns for the company. Researchers like, Reicheld and Sasser (1990), Anderson and Fornell (1994), Heskett et al. (1994), Storbacka et al. (1994), Rust et al. (1995) and Schneider and Bowen (1995) also came across similar findings in their study. Some researchers believe that the ultimate goal of customer satisfaction is customer loyalty, which refers to the tendency of a customer to choose one service or product over another for a particular need (Heskett 1997). This factor can drive a company to earn more profits and boost their performance (Reichheld, 1993). Infact service quality is the strategic tool to reinforce competitive advantages and increase the profitability of the business (Tam, 2004). The importance of service quality in banks has been emphasized by researchers in their studies and has concluded that perceived quality advantage helps in achieving higher profits (Raddon 1987; Buzzell & Gale 1987). As against this banks today are under tremendous pressure due to competition, changing demands of the customers', changing demographics and the advancement in information technology have forced them to strive hard to achieve customer satisfaction. Thus banks by providing quality service may help in increasing

customer satisfaction and loyalty, and further help to improve their core competences and business performance (Kunst and Lemmink 2000, Stafford 1996).

8.1 Statistical techniques used

After conducting exploratory factor analysis on the data gathered through survey method on bank customers, seven factors were extracted as service quality dimensions, further these seven factors were confirmed using confirmatory Factor Analysis for scale validation. Further for testing the hypotheses, one way Anova, correlation analysis, regression analysis and structural equation modeling (SEM) is used. The validity of scale is established through the process of content, convergent and discriminant validity. The reliability and the internal consistency of data collected have been judged through tests Cronbach's alpha values; construct reliability (CR) and average variance extract (AVE) values.

8.2 Analysis of data

Objective:

To examine the relationship between service quality with the financial performance of public, private and multi-state cooperative banks vis-à-vis customer satisfaction and customer loyalty.

Hypothesis:

H6→ There is a significant difference in the financial performance indicators in respect of public, private and multi state cooperative banks.

Table no. 8.2.1 One way Anova of performance indicators in case of public, private and multi-state cooperative banks:

One way Anova

Performance Variables	Banks	N	Mean	Std. Dev	F	P-value
Capital adequacy ratio (CAR)	Public	50	15.8138	6.14109	5.497	0.005
	Private	50	15.0350	3.21723		
	Coop	50	13.1838	1.31997		
Total advance total asset (TA/TA)	Public	50	60.2982	6.41468	20.458	.000
	Private	50	58.5078	5.12088		
	Coop	50	53.1194	5.91637		
Profit per employee	Public	50	.7172	.23818	68.508	.000

(PPE)	Private	50	2.1034	2.72169		
	Coop	50	4.8086	1.41990		
Net interest margin (NIM)	Public	50	2.5574	.81450	23.062	.000
	Private	50	3.7042	1.04223		
	Coop	50	3.3558	.70609		
Interest income total income (II/TI)	Public	50	84.9166	7.11979	13.427	.000
	Private	50	78.7548	11.15468		
	Coop	50	74.8412	10.63519		
Return on asset (ROA)	Public	50	.7848	.29313	10.513	.000
	Private	50	1.6320	.57600		
	Coop	50	2.7030	3.57296		
Non-performing assets (NPA)	Public	50	2.181592	1.9228991	7.027	0.001
	Private	50	.987960	.9175472		
	Coop	50	1.301600	1.8848736		
Credit Deposit ratio (CD)	Public	50	.7596	.11079	31.941	.000
	Private	50	.8916	.21691		
	Coop	50	.6558	.07896		
Investment Deposit ratio (ID)	Public	50	.323	.084	19.21	.000
	Private	50	.452	.132		
	Coop	50	.350	.108		

(Source: Secondary data)

In the table 8.2.1 given above one way Anova was performed to test the hypothesis, whether there exist any significant difference in the performance parameters of bank operating in public, private and multi-state cooperative banks, from the above table it is observed that there is a significant difference on all the parameters of performance pertaining to all three categories of banks since the p-value of all the parameters taken for the study is <0.05. Thus we accept the alternate hypothesis and accept the alternate hypothesis that there is a significant difference in the performance parameters pertaining to public, private and cooperative sector banks. Further it is also observed that in case of public sector banks the amount of capital adequacy ratio, total advance to total assets,

interest income to total income is higher as compared to private and cooperative sector banks, in case of private sector banks it is observed that the net interest margin, credit deposit ratio and investment deposit ratio is the highest and the percentage of NPA is the lowest as compared to public and cooperative sector banks, whereas in case of multi-state cooperative sector banks it is observed that the return on asset is higher as compared to public and private sector banks.

Hypothesis:

H7→ There is a significant relationship between bank performance indicators with return on asset (ROA) in case of public, private and multi state cooperative banks.

Correlation analysis for performance parameters of banks

Table 8.2.2: Correlation pertaining to performance of Public sector banks

		CAR	TA/TA	PPE	NIM	II/TI	NPA	CDR	IDR
ROA	Pearson Correlation	.300*	.177	.251	.611**	.019	-.405**	.043	.209
	Sig. (2-tailed)	.034	.219	.078	.000	.897	.004	.766	.145
	N	50	50	50	50	50	50	50	50

(Source: Secondary data)

** Significant at 1%, * Significant at 5%

From the table 8.2.2 it is observed that capital adequacy ratio and net interest margin has positive correlation with return on asset, on the other hand NPA has negative correlation with return on asset in case of public sector banks. The other explanatory variables have no significant relationship with return on asset pertaining to public sector banks. Thus we accept the alternate hypothesis and conclude that capital adequacy ratio, net interest margin and non performing assets have significant relationship with return on asset pertaining to public sector banks, since the p value is <0.05 level of significance. Further it can be inferred that return on asset in case of public sector banks increases when there is an increase in capital adequacy ratio and net interest margin ratio.

Table no. 8.2.3: Multiple regression analysis of Public sector banks

Independent variables		Dependent variable: Return on asset (ROA)	
	Beta value	T- Value	Sig
(Constant)	.811	1.684	.100
Capital adequacy ratio	.005	.870	.390
Total advance total asset	.008	1.799	.080
Profit per employee	.450	3.785	.001*
Net interest margin	.303	7.058	.000*
Interest income total income	.009	2.281	.028**
Non-performing assets	-.053	-3.502	.001*
Credit deposit ratio	.007	.014	.989
Investment deposit ratio	.429	.542	.591
Statistics	R^2= .730 Adj R^2= .675, F(8,40)= 13.485 P<=0.05		
Homogeneity of variance	Chi. Sq(1) = .174, p > .05		
Normality	Shapiro-Wilk = .974, df = 49 , p = .333		

(Source: Secondary data)

**indicates significant at 5%, *indicates significant at 1%

The regression equation for the above model is as follows:

$$ROA = .811 + 0.005\ (CAR) + 0.008\ (TA) + 0.450\ (PPE) + 0.303\ (NE) - .009\ (II) - .053\ (NPA) + .007\ (CDR) + .429(IDR)$$

As per table 8.2.3 multiple regression analysis was performed to analyze the effect of various performance indicators on the profitability of banks operating in the public sector. As per the results stated above, the independent variables are capital adequacy ratio, total advance to total assets, profit per employee, net interest margin, interest income to total income, NPA, credit deposit ratio and investment deposit ratio and the dependent variable is return on asset (ROA). The coefficient determination R^2 is .730 and the adjusted R^2 is .675. The eight performance indicators of public sector bank explained 68% variance in the return of asset variable of banks profitability. The remaining 32% of variations in financial performance of public sector banks are

explained by other variables which are not included in the study. The value of F test is 13.485, which is statistically significant since the p value is <0.05.

The result of the regression analysis indicate that there is significant relationship between bank performance indicators and ROA with respect to profit per employee, net interest margin and interest income to total income which have a positive relationship, whereas non performing asset and have a negative relationship with return on asset since the p value is <0.05, where as there is no significant relationship between bank performance indicators and ROA with respect to capital adequacy ratio, total advance to total assets, investment deposit ratio and credit deposit ratio since the p value is >0.05 in case of public sector banks.

Thus we accept the alternate hypothesis in respect of profit per employee, net interest margin, interest income to total income and non performing asset and reject with respect to capital adequacy ratio, total advance to total assets, investment deposit ratio and credit deposit ratio pertaining to public sector banks.

Further it is observed that the standardized beta coefficient which had the highest contribution of bank performance indicators towards return on asset in profit per employee β= 0.450, p value = .001 followed by net interest margin β= 0.303, p value = .000 nonperforming asset β= -0.053, p value = .001 and interest income to total income β= 0.09, p value = .028 were found to be statistically significant in case of banks operating in the public sector.

For testing assumption of homoscedasticity White test is used. Test statistics is statistically insignificant (p>0.05) indicating that assumption of homoscedasticity across error terms is followed properly. On the other hand normality across error terms is another basic assumption for regression in the above model, Shapiro-Wilk test is used, since p >0.05, thus it is concluded that error terms are normally distributed.

Table 8.2.4: Correlation pertaining to performance of Private sector banks

		CAR	TA/TA	PPE	NIM	II/TI	NPA	CDR	IDR
ROA	Pearson Correlation	.128	.707*	.345*	.597*	.252	-.252	.423**	.130
	Sig. (2-tailed)	.376	.000	.014	.000	.077	.078	.027	.367
	N	50	50	50	50	50	50	50	50

(Source: Secondary data)
** Significant at 5%, * Significant at 1%

From the table 8.2.3 it is observed that total advance to total assets, profit per employee, and investment deposit ratio has positive correlation with return on asset, on the other hand NPA has negative correlation with return on asset, whereas other explanatory variables had no correlation with return on asset pertaining to private sector banks. Thus we accept the alternate hypothesis and conclude that total advance to total assets, profit per employee, net interest margin and credit deposit ratio have significant relationship with return on asset pertaining to private sector banks, since the p value is <0.05 level of significance. Further it can be inferred that the return on asset of private sector banks shall increase when total advance to total assets, profit per employee, net interest margin, and credit deposit ratio increases.

Table 8.2.5: Multiple regression analysis of Private sector banks

Independent variables		Dependent variable: Return on asset (ROA)	
	Beta value	T- Value	Sig
(Constant)	3.610	5.627	.000
Capital adequacy ratio	.012	.683	.498
Total advance total asset	.065	5.672	.000**
Profit per employee	.022	1.076	.288
Net interest margin	.179	3.519	.001**
Interest income total income	.006	1.088	.283
Non-performing assets	-.129	-2.124	.040*
Credit deposit ratio	.308	.816	.419
Investment deposit ratio	.935	1.339	.188
Statistics	R^2= .758 Adj R^2= .711, F(8,40)= 16.041 P<=0.05		
Homogeneity of variance	Chi. Sq(1) = 1.039, p > .05		
Normality	Shapiro-Wilk = .966 , df = 49 , p = .16		

(Source: Secondary data)
*indicates significant at 5%, **indicates significance at 1%

The regression equation for the above model is as follows:

$$ROA = 3.610 + 0.012\ (CAR) - 0.065\ (TA) + 0.022\ (PPE) + 0.179\ (NE) - .001\ (II) - .129\ (NPA) + .308\ (\mathrm{CDR}) + .935\ (\mathrm{IDR})$$

As per table 8.2.7 multiple regression analysis was performed to analyze the effect of various performance indicators on the profitability of banks operating in the private sector. As per the results stated above, the independent variables are capital adequacy ratio, total advance to total assets, profit per employee, net interest margin, interest income to total income, NPA, credit deposit ratio and investment deposit ratio and the dependent variable is return on asset (ROA). The coefficient determination R^2 is .758 and the adjusted R^2 was .711. The eight performance indicators of private sector banks explained 71% variance in the return of asset variable of banks profitability. The remaining 29% of variations in financial performance of public sector banks are explained by other variables which are not included in the study. The value of F test was 13.485 and is statistically significant since the p-value is <0.05.

The result of the regression analysis indicate that there is significant relationship between bank performance indicators and ROA with respect to total advance to total assets and net interest margin which have a positive relationship, whereas non performing asset have a negative relationship with return on asset since the p value is <0.05, where as there is no significant relationship between bank performance indicators and ROA with respect to capital adequacy ratio, profit per employee, interest income to total income, investment deposit ratio and credit deposit ratio since the p value is >0.05 in case of private sector banks.

Thus we accept the alternate hypothesis in respect of total advance to total assets, net interest margin and non performing asset and reject with respect to capital adequacy ratio, profit per employee, interest income to total income, investment deposit ratio and credit deposit ratio pertaining to private sector banks.

Further it is observed that the standardized beta coefficient which had the highest contribution of bank performance indicators towards return on asset in net interest margin β= 0.179, p value = .001 followed by total advance to total assets β= 0.065, p value = .000 and nonperforming asset β= -0.129, p value = .040 were found to be statistically significant in case of banks operating in the private sector.

For testing assumption of homoscedasticity White test is used. Test statistics is statistically insignificant (p>0.05) indicating that assumption of homoscedasticity across error terms is followed properly. On the other hand normality across error terms is another basic assumption for regression in the above model, Shapiro-Wilk test is used, since p >0.05, thus it is concluded that error terms are normally distributed.

Table 8.2.6: Correlation pertaining to performance of Multi-state cooperative sector banks

		CAR	TA/TA	PPE	NIM	II/TI	NPA	CDR	IDR
ROA	Pearson Correlation	.212	.413**	.331*	.733**	.016	-.262	.261	.305
	Sig. (2-tailed)	.140	.003	.025	.000	.913	.166	.167	.874
	N	50	50	50	50	50	50	50	50

(Source: Secondary data)
** Significant at 1%, * Significant at 5%

From the table 8.2.4 it is observed that total advance to total assets, profit per employee net interest margin and investment deposit ratio has positive correlation with return on asset, on the other hand capital adequacy ratio and interest income to total income is negatively correlated, whereas the other explanatory variables has negative correlation with return on asset pertaining to multi-state cooperative banks. Thus we accept the alternate hypothesis and conclude that total advance to total assets, profit per employee and net interest margin have significant relationship with return on asset pertaining to multi-state cooperative sector banks, since the p value is <0.05 level of significance. Further it can be inferred that return on asset in case of multi-state cooperative banks shall increase if there is an increase in total advance to total assets, net interest margin and investment deposit ratio.

Table 8.2.7: Multiple regression analysis of Multi-state cooperative banks

Independent variables		Dependent variable: Return on asset (ROA)	
	Beta value	T- Value	Sig
(Constant)	1.052	.123	.903

Capital adequacy ratio	.588	1.672	.102
Total advance total asset	.084	1.026	.311
Profit per employee	.202	.802	.427
Net interest margin	3.679	6.323	.000**
Interest income total income	.146	3.674	.001**
Non-performing assets	-.469	-1.824	.076
Credit deposit ratio	7.756	1.822	.076
Investment deposit ratio	.522	.122	.903
Statistics	R^2= .747 Adj R^2= .698, F(8,40)= 15.146, P<=0.05		
Homogeneity of variance	Chi. Sq(1) = .0942, p > .05		
Normality	Shapiro-Wilk = .964, df = 50 , p = .128		

(Source: Secondary data)

**indicates significance at 1%

The regression equation for the above model is as follows:

$$ROA = 1.052 + 0.588\ (CAR) - 0.084\ (TA) + 0.202\ (PPE) + 3.679\ (NE) + .146\ (II) - .469\ (NPA) + 7.756\ (\mathrm{CDR}) + .522\ (\mathrm{IDR})$$

As per table 8.2.9 multiple regression analysis was performed to know the effect of various performance indicators on the profitability of banks operating in the cooperative sector. As per the results stated above, the independent variables are capital adequacy ratio, total advance to total assets, profit per employee, net interest margin, interest income to total income, NPA, credit deposit ratio and investment deposit ratio and the dependent variable is return on asset (ROA). The coefficient determination R^2 is .747 and the adjusted R^2 is .698. The eight performance indicators of multi-state cooperative sector banks explained 70% variance in the return of asset variable of banks profitability. The remaining 30% of variations in financial performance of multi-state cooperative sector banks are explained by other variables which are not included in the study. The value of F test was 15.14 and is statistically significant since the p-value is <0.05.

The result of the regression analysis indicate that there is significant relationship between bank performance indicators and ROA with respect to net interest margin and interest income to total income with return on asset since the p value is <0.05, where as

there is no significant relationship between bank performance indicators and ROA with respect to capital adequacy ratio, total advance to total assets, profit per employee, non performing asset, investment deposit ratio and credit deposit ratio since the p value is >0.05 in case of multi state cooperative sector banks.

Thus we accept the alternate hypothesis in respect of net interest margin and interest income to total income and reject with respect to capital adequacy ratio, total advance to total assets, profit per employee, non performing asset, investment deposit ratio and credit deposit pertaining to multi state cooperative sector banks.

Further it is observed that the standardized beta coefficient which had the highest contribution of bank performance indicators towards return on asset in net interest margin $\beta = 3.679$, p value = .000 and interest income to total income $\beta = 0.146$, p value = .001 were found to be statistically significant in case of banks operating in the multi state cooperative sector.

For testing assumption of homoscedasticity White test is used. Test statistics is statistically insignificant ($p>0.05$) indicating that assumption of homoscedasticity across error terms is followed properly. On the other hand normality across error terms is another basic assumption for regression in the above model, Shapiro-Wilk test is used, since $p > 0.05$, thus it is concluded that error terms are normally distributed.

Hypothesis:

H8→ There is a significant relationship between the constructs of service quality, customer satisfaction, customer loyalty and financial performance in case of public, private and multi state cooperative banks.

The various resulting measurement models are as follows:

Structural equation models

Figure 8a: CFA model for service quality dimensions:

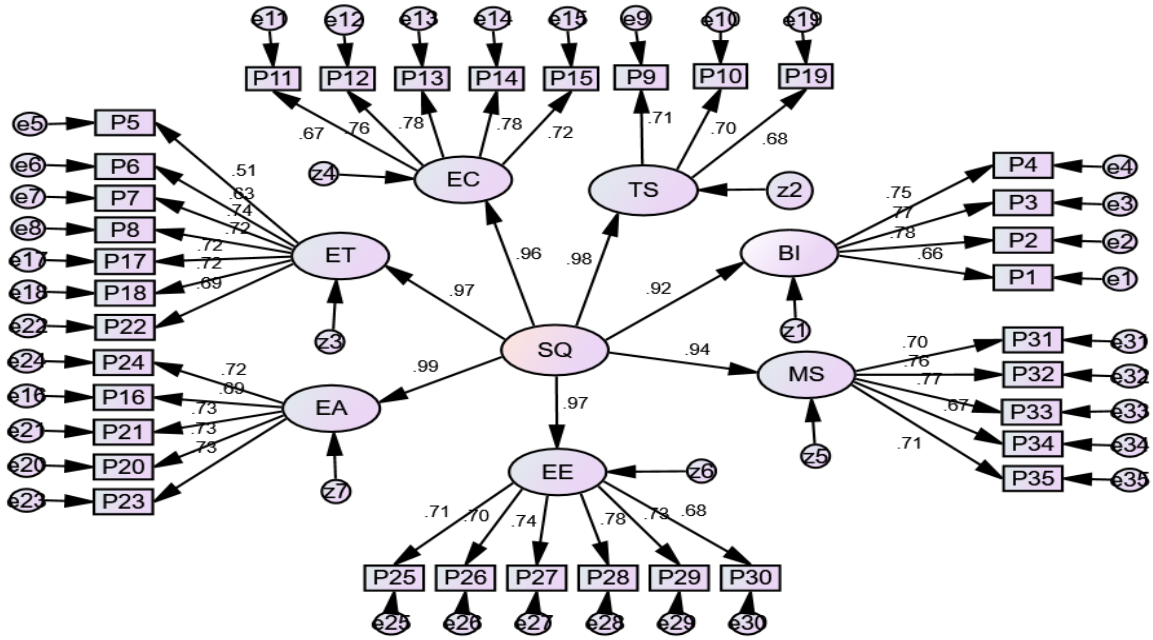

(Source: Amos output)

Nomenclature of variables used in the constructs of the model:

SQ – Service quality, BI – Bank infrastructure, EA – Employee assurance, EC – Employee commitment, ET – Employee trust, EE – employee empathy, MS – Modern services, TS – Transaction security.

The First Order Confirmatory factor Analysis model for the construct 'service quality' was designed to test the relationship between seven variables and main construct viz. Service quality. This model consisted of seven indicators of service quality viz. Bank infrastructure, transaction security, employee commitment, employee empathy, employee assurance, employee trust and modern services. All model fit indices were sufficiently satisfied with their related acceptable fits. The model has also been proved to be valid as indicated through AVE which came to be 0.653, higher values of standardized regression weights of each indicator, high construct reliability (0.818) which is assessed from the construct loadings and error variances (Hair et al., 2009).

Table 8.3.1: Model fit indices for Service quality dimensions

Fit index	CMIN/DF	NFI	TLI	GFI	AGFI	CFI	RMSEA	RMR
Acceptable values	<5	>.95	>.95	>.95	>.90	>.90	<0.08	<0.08

Model fit scores	3.214	0.874	0.903	0.848	0.827	.909	0.06	.037

(Source: Amos Output)

From the table 8.3.1 the fit indices of the model is given, it can be said that the service quality dimensions have satisfied Parsimonious fit, since p value is .000, CMIN/df < 5, further it is observed that the TLI, CFI, are greater than .90 and RMSEA is .06 which indicates model has satisfied the criteria's for goodness of fit. Whereas remaining fit indices such as NFI & AGFI satisfies the acceptable level. Hence we confirm that seven factors forms service quality of banks.

Table 8.3.2: Structural Model regression path coefficients and its significance

Regression Paths			Estimate	Std. Est	C.R.	P-Value	Result
EC	<---	SQ	1.018	0.052	19.757	***	Significant
BI	<---	SQ	0.875	0.047	18.764	***	Significant
ET	<---	SQ	0.811	0.063	12.769	***	Significant
EA	<---	SQ	1.016	0.051	19.807	***	Significant
MS	<---	SQ	0.883	0.05	17.709	***	Significant
EE	<---	SQ	0.985	.050	19.807	***	Significant
TS	<---	SQ	0.96	0.051	18.738	***	Significant

(Source: Amos output)

***Significant at 1%

From table 8.3.2 given above, it can be said that all the research hypotheses of the study pertaining to the relationship between service quality and dimensions of service quality across public, private and multi-state cooperative banks are accepted since the p value is <0.05. The results of the structural model given above shows that all dimensions of service quality are significant

Figure 8b: Unidimensional CFA model for customer loyalty

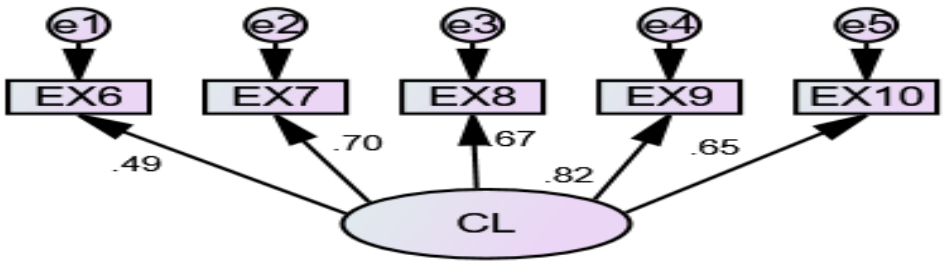

(Source: Amos output)

Nomenclature of variables used in the constructs of the model:

CL – Customer loyalty

Table 8.3.3 Fit indices of customer loyalty model

Fit index	CMIN/DF	NFI	TLI	GFI	AGFI	CFI	RMSEA	RMR
Acceptable values	<5	>.95	>.95	>.95	>.90	>.90	<0.08	<0.08
Model fit scores	3.612	0.98	0.971	0.989	0.968	0.985	0.065	.018

Source: Amos output

From table 8.3.3 the fit indices of the customer loyalty is given, it can be said that all five statements leading to customer loyalty have satisfied Parsimonious fit, since p value is .003 CMIN/df < 5, TLI, CFI, are greater than .90 and RMSEA is .065 which indicates that the model has satisfied the criteria's for goodness of fit. Whereas remaining fit indices such as NFI & AGFI also satisfies the acceptable level of the fit indices. Hence we confirm that all five statements forms customer loyalty construct of the banks.

Table 8.3.4: Structural Model regression path coefficients and its significance

Regression Paths			Estimate	Std. Est.	C.R.	P value	Result
Would like to receive services from the same bank.	<---	CL	.661	.061	10.823	***	Significant
Price paid and services received by me are justified	<---	CL	1.514	0.14	10.823	***	Significant
Do not intend to change the bank on account of better service quality.	<---	CL	1.42	0.135	10.553	***	Significant
Would support my bank consistently.	<---	CL	1.855	0.169	10.945	***	Significant
Will recommend the name of my bank to my friends and relatives.	<---	CL	1.417	0.136	10.389	***	Significant

(Source: Amos output)

***Significant at 1%

Table 8.3.4 gives model regression paths which consist of five indicators viz. Receive service from same bank, price paid for the service is justified, do not intend to change the bank, support my bank consistently and recommend bank to friends and relatives.. All model fit indices were sufficiently satisfied with their related acceptable fits. The model has also been proved to be valid as indicated through AVE which came to be 0.536, higher values of standardized regression weights of each indicator, high construct reliability (0.804) which was assessed from the construct loadings and error variances (Hair et al., 2009).

Figure 8c: Unidimensional CFA model for customer satisfaction

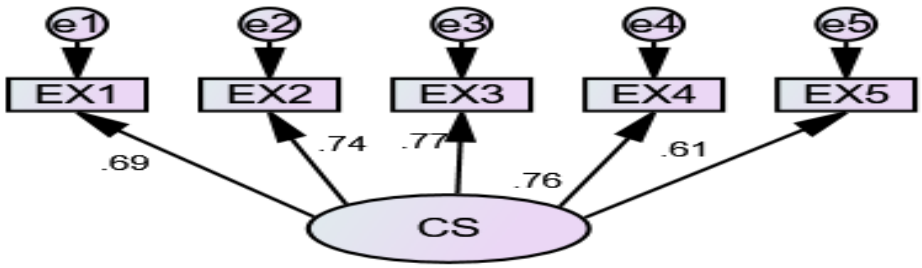

(Source: Amos output)

Nomenclature of variables used in the constructs of the model:

CS – Customer satisfaction

Table 8.3.5:Fit indices of customer satisfaction model

Fit index	CMIN/DF	NFI	TLI	GFI	AGFI	CFI	RMSEA	RMR
Acceptable values	<5	>.95	>.95	>.95	>.90	>.90	<0.08	<0.08
Model fit scores	2.018	0.991	0.991	0.994	0.981	0.995	0.041	.014

(Source: Amos output)

From table 8.3.5 the model fit indices of the customer satisfaction model is given, it can be said that the five statements related to customer satisfaction have satisfied Parsimonious fit, since the p value is 0.073, CMIN/df < 5, TLI, CFI, are greater than .90 and RMSEA is .041 which indicates model has satisfied the criteria's for goodness of fit. Whereas the remaining fit indices such as NFI & AGFI satisfies the acceptable level of fit. Hence we confirm that all five statements forms customer satisfaction construct of the banks.

Table 8.3.6: Structural Model regression path coefficients and its significance

Regression Paths			Estimate	Std. Est.	C.R.	P value	Result
Would like to receive services from the same bank.	<---	CL	.661	.061	10.823	***	Significant
Price paid and services received by me are justified	<---	CL	1.514	0.14	10.823	***	Significant
Do not intend to change the bank on account of better service quality.	<---	CL	1.42	0.135	10.553	***	Significant
Would support my bank consistently.	<---	CL	1.855	0.169	10.945	***	Significant
Will recommend the name of my bank to my friends and relatives.	<---	CL	1.417	0.136	10.389	***	Significant

(Source: Amos output)

***Significant at 1%

As per table 8.3.6 the regression paths is presented, this model consist of five indicators viz. satisfied with the variety of service offered, satisfied with safety and security of the bank, services offered create value for money and services provides are effective and

efficient . All model fit indices were sufficiently satisfied with their related acceptable fits. The model has also been proved to be valid as indicated through AVE which came to be 0.584, higher values of standardized regression weights of each indicator, high construct reliability (0.856) which was assessed from the construct loadings and error variances (Hair et al., 2009).

Figure 8d: Unidimensional CFA model for financial performance

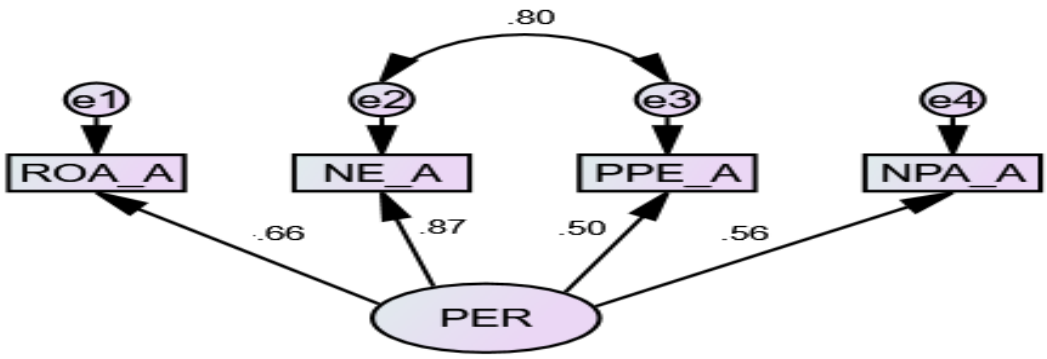

(Source: Amos output)

Nomenclature of variables used in the constructs of the model:

Per – Financial performance, ROA_A – Return on asset NE_A – Net interest margin, PPE_A – Profit per employee, NPA_A – Non performing assets.

Table 8.3.7: Fit indices of financial performance model

Fit index	CMIN/DF	NFI	TLI	GFI	AGFI	CFI	RMSEA	RMR
Acceptable values	<5	>.95	>.95	>.95	>.90	>.90	<0.08	<0.08
Model fit scores	3.392	.994	.929	0.997	.975	.973	.058	0.068

(Source: Amos output)

From table 8.3.7 fit indices for the financial performance model is given , it can be said that the parameters of banks have satisfied Parsimonious fit, since the p value is .066, CMIN/df < 5, TLI, CFI, are greater than .90 and RMSEA is .058 which indicates that the model has satisfied the criteria's for goodness of fit. Whereas remaining fit indices

such as NFI & AGFI satisfies the acceptable level of fit indices. Hence we confirm that all four financial indicators forms financial performance construct of the banks.

Table 8.3.8: Structural Model regression path coefficients and its significance

Regression Paths			Estimate	Std. Est.	C.R.	P-value	Result
ROA_A	<---	PER	0.96	0.087	11.097	***	Significant
NE_A	<---	PER	.716	.095	7.536	***	Significant
PPE_A	<---	PER	1.396	0.185	7.536	***	Significant
NPA_A	<---	PER	1.699	0.163	10.407	***	Significant

(Source: Amos output)

***Significant at 1%

As per table 8.3.8 the regression paths is presented, this model consist of nine financial indicators, but for the performance CFA model only four indicators were taken, the remaining five indicators were dropped to get acceptable fit, the indicators are viz. return on asset, net interest margin, profit per employee and non performing assets . All model fit indices were sufficiently satisfied with their related acceptable fits. The model has also been proved to be valid as indicated through AVE which came to be 0.513, higher values of standardized regression weights of each indicator, high construct reliability (0.831) which was assessed from the construct loadings and error variances (Hair et al., 2009).

Structural equation models (SEM) to test the relationship between service quality, customer satisfaction, customer loyalty and financial performance across public, private and cooperative sector banks:

Figure 8e: Structural equation model for public sector banks:

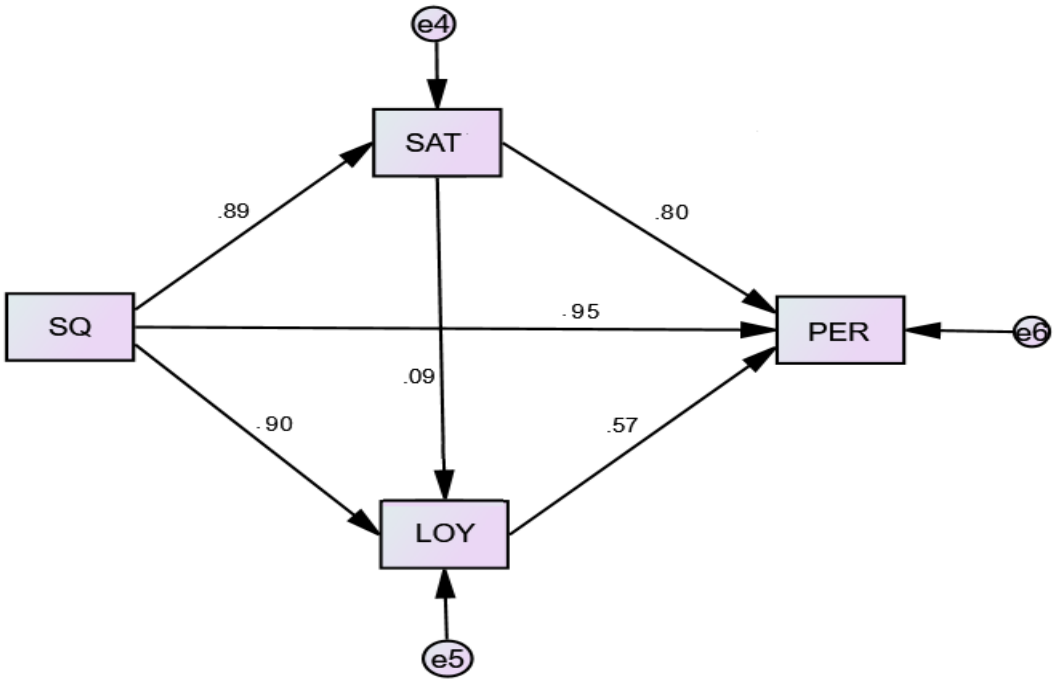

Source: Amos Output

<u>Nomenclature of variables used in the constructs of the model:</u>

SQ – Service quality, CS – Customer satisfaction, LOY – Customer loyalty, PER – Financial performance.

Table 8.3.9: Fit Indices of public sector banks

Fit index	CMIN/DF	NFI	TLI	GFI	AGFI	CFI	RMSEA	RMR
Acceptable values	<5	>.95	>.90	>.95	>.90	>.90	<0.08	<0.08
Model fit scores	1.991	0.907	0.943	0.869	.832	0.951	.070	.059

(Source: Amos output)

The structural equation modeling (SEM) is used to test the model that was hypothesized. From the table 8.3.9 fit indices of the structural model pertaining to public sector banks is given, the overall model fit indices reveals that the model fits to the data, since the p value is .000, CMIN/df < 5, TLI, CFI, are greater than .90 and RMSEA is .070 which indicates that the model has satisfied the criteria's for goodness of fit. Whereas the remaining indices also satisfy the model fit at acceptable level such as NFI & AGFI.

Table 8.3.10: Structural Model regression path coefficients and its significance: Public sector banks

Regression paths			Estimate	Std. Est.	C.R.	P-value	Result
SAT	<---	SQ	0.901	0.168	5.365	***	Significant
LOY	<---	SAT	0.436	0.213	2.046	0.059*	Significant
LOY	<---	SQ	0.312	0.11	2.836	0.013**	Significant
PER	<---	SAT	2.123	0.393	5.407	***	Significant
PER	<---	SQ	4.343	0.482	9.017	***	Significant
PER	<---	LOY	2.526	0.382	6.621	***	Significant

(Source: Amos output)

***Significant at 1%, ** Significant at 5%,*Significant at 10%

As per table 8.3.10 the regression paths pertaining to four constructs service quality, customer satisfaction, customer loyalty and financial performance in case of public sector banks is given, the research hypotheses of the study pertaining to relationship between four constructs of in the case of public sector banks show significant relationship among the all the constructs in the above model. It is being observed that service quality influences customer satisfaction, where the β-value = .436, p = .000, customer satisfaction influences financial performance, where the β-value = 1.393, p =.000, service quality also is significant with financial performance, where β-value = 4.343, p =.000 similarly customer loyalty has a significant impact on the financial performance where β-value = 2.526, p =.000 at 1% level of significance, further it is observed that service quality influences customer loyalty where the β-value =.312, p<=.013 which is significant at 5% level of and finally customer satisfaction also significantly influences customer loyalty where β-value = .436, p<= .059 at 10% level of significance

Figure 8f: Structural Equation Model for Private sector banks:

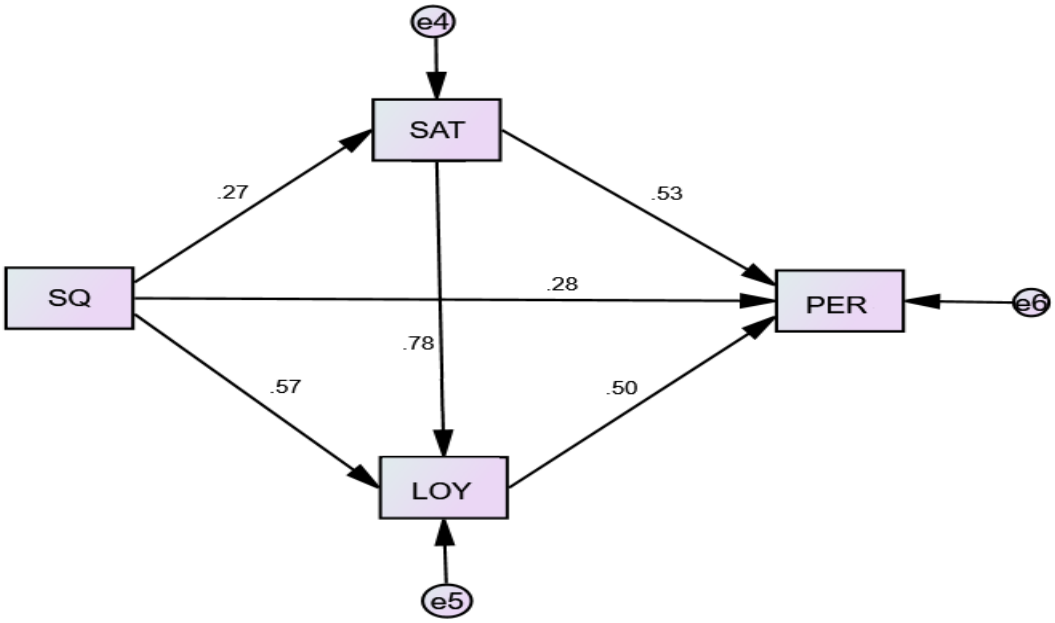

Source: Amos Output

Nomenclature of variables used in the constructs of the model:

SQ – Service quality, CS – Customer satisfaction, LOY – Customer loyalty, PER – Financial performance.

Table 8.3.11: Fit Indices of private sector banks

Fit index	CMIN/DF	NFI	TLI	GFI	AGFI	CFI	RMSEA	RMR
Acceptable values	<5	>.95	>.90	>.95	>.90	>.90	<0.08	<0.08
Model fit scores	2.17	0.863	0.906	0.842	.801	0.88	.076	.051

(Source: Amos output)

The Structural Equation Modeling (SEM) is used to test the model that was hypothesized. From the table 8.3.11 fit indices of the structural model pertaining to private sector banks is given, the overall model fit indices reveals that the model fits to the data, since p value is .000, CMIN/df < 5, TLI, CFI, are greater than .90 and RMSEA is .076 which indicates model has satisfied the criteria's for goodness of fit. Whereas the remaining indices also satisfy the model fit at acceptable level such as NFI & AGFI.

Table 8.3.12: Structural Model regression path coefficients and its significance: Private sector banks

Regression paths			Estimate	Std. Est.	C.R.	P-value	Result
SAT	<---	SQ	0.203	0.0856	2.371	0.034**	Significant
LOY	<---	SAT	0.956	0.351	2.725	***	Significant
LOY	<---	SQ	0.368	0.199	1.853	0.067*	Significant
PER	<---	SAT	4.296	1.573	2.731	***	Significant
PER	<---	SQ	1.379	0.719	1.919	0.055*	Significant
PER	<---	LOY	3.938	1.326	2.97	***	Significant

(Source: Amos output)

***Significant at 1%, ** Significant at 5%,*Significant at 10%

As per table 8.3.12 the regression paths pertaining to four constructs service quality, customer satisfaction, customer loyalty and financial performance in case of private sector banks is given, it can be said that he research hypotheses of the study pertaining to relationship between four constructs of in the case of private sector banks show significant relationship among all the constructs in the above model. It is observed that customer satisfaction influences customer loyalty where the β-value = .956, p <=.000, customer satisfaction influences financial performance where β-value = 4.296, p <=.000 and customer loyalty has a strong influence on financial performance where the β-value = 3.938, p <=.000 at 1% level of significance, further it is also observed that service quality influences customer satisfaction significantly where the β-value =0.203, p<=.034, at 5% level of significance. It is also observed that service quality also significantly influences customer loyalty where the β-value = 0.368, p <=.067 and service quality influences financial performance in the case of private sector banks where β-value =1.397, p<=.055 at 10% level of significance.

Figure 8g: Structural Equation Model for multi-state cooperative sector banks:

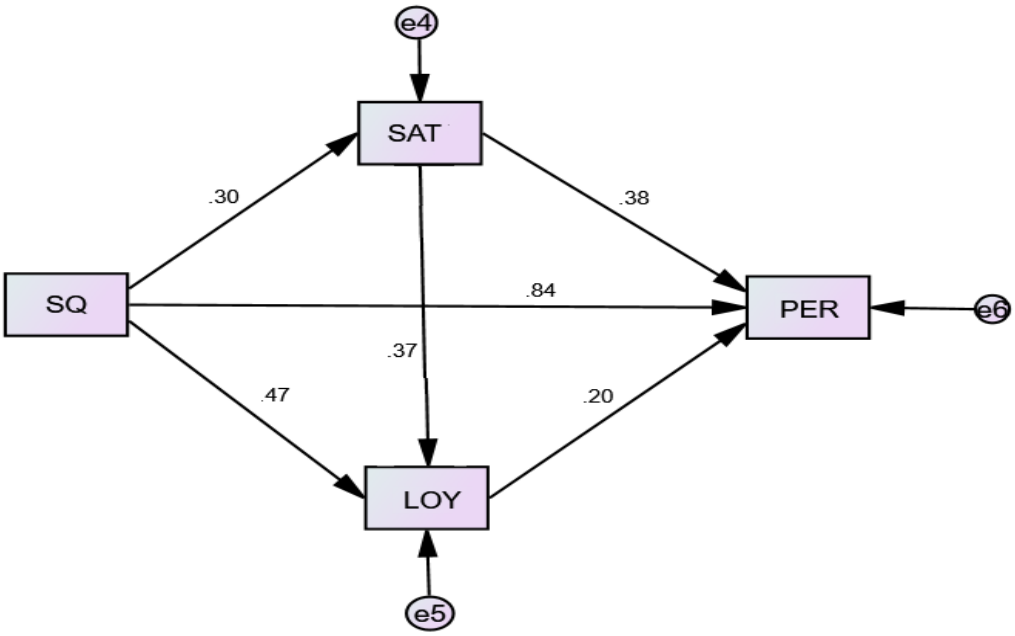

Source: Amos Output

Nomenclature of variables used in the constructs of the model:

SQ – Service quality, CS – Customer satisfaction, LOY – Customer loyalty, PER – Financial performance.

Table 8.3.13: Model Fit Indices of Multi- state cooperative sector banks

Fit indices	CMIN/DF	NFI	TLI	GFI	AGFI	CFI	RMSEA	RMR
Acceptable values	<5	>.95	>.90	>.95	>.90	>.90	<0.08	<0.08
Model fit scores	2.367	.893	.922	.863	.819	.935	.080	.093

(Source: Amos output)

The Structural Equation Modeling (SEM) is used to test the model that was hypothesized. From the table 8.3.13 fit indices of the structural model pertaining to multi-state cooperative sector banks is given, the overall model fit indices reveals that the model fits to the data, since p value is .000, CMIN/df < 5, TLI, CFI, are greater than .90 and RMSEA is .080 which indicates model has satisfied the criteria's for goodness of fit. Whereas remaining fit indices are satisfies at acceptable level such as NFI & AGFI.

Table 8.3.14: Structural Model regression path coefficients and its significance: Multi-state cooperative sector banks

Regression paths			Estimate	Std. Est.	C.R.	P-value	Result
SAT	<---	SQ	0.414	0.175	2.36	0.033**	Significant
LOY	<---	SAT	1.309	0.611	2.14	0.049**	Significant
LOY	<---	SQ	0.766	0.245	3.12	***	Significant
PER	<---	SAT	9.02	0.279	32.275	***	Significant
PER	<---	SQ	61.899	0.468	132.172	***	Significant
PER	<---	LOY	61.015	0.972	62.782	***	Significant

(Source: Amos output)

***Significant at 1%, ** Significant at 5%

As per table 8.3.14 the regression paths pertaining to four constructs service quality, customer satisfaction, customer loyalty and financial performance in case of multi-state cooperative sector banks is given, it can be said that he research hypotheses of the study pertaining to relationship between four constructs of in the case of cooperative sector banks show significant relationship among all the constructs in the above model. It is observed that service quality influences customer satisfaction where the β-value =.414, p<=.033 and customer satisfaction significantly influences loyalty of the customers where the β-value =1.309, p<=.049 at 5% level of significance. From the above table it is also observed that service quality have a significant relationship with customer loyalty where the β-value =0.766, p<=.000, customer satisfaction is significant with financial performance where β-value =9.02, p<=.000, it is also observed that service quality influences financial performance where β-value =61.899, p<=.000 and finally it is also observed that loyalty of the customers influences the financial performance in the case of cooperative banks where β-value =61.015, p<=.000 at 1% level of significance.

8.4 Testing of Hypotheses

The fourth objective of the study comprise of eight hypotheses.

H6→ There is a significant difference among various performance indicators in case of public, private and multi-state cooperative banks.

H7→ There is a significant relationship between bank performance indicators and return on asset (ROA) in case of public, private and multi state cooperative banks.

H8a→ There is a significant relationship between service quality and customer satisfaction in public, private and multi state cooperative banks.

H8b→ There is a significant relationship between service quality and customer loyalty in public, private and multi state cooperative banks.

H8c→ There is a significant relationship between customer satisfaction and customer loyalty in public, private and multi state cooperative banks.

H8d→ There is a significant relationship between service quality and financial performance of public, private and multi state cooperative banks.

H8e→ There is a significant relationship between customer satisfaction and financial performance in public, private and multi state cooperative banks.

H8f→ There is a significant relationship between customer loyalty and financial performance in public, private and multi state cooperative banks.

8.5 Hypotheses testing results

The research model that is hypothesized proved that service quality did influence the satisfaction levels of the customers, so also the loyalty of the customers in various categories of banks, since the p-value is significant at 5% level of confidence. Further it is also observed that service quality does play a significant role in determining the financial performance across various categories of banks, since p-value is significant in case of all three categories of banks. From the output of the path diagram it is observed that customer loyalty has an impact on financial performance across all categories of banks since p-value is <0.05, and it is also observed that better satisfaction of the customers lead to financial performance in case of all three sectors banks since the p-value is <0.05 level of significance.

As far as the first hypothesis is concerned it is observed that there is a statistically significant difference on all the performance indicators of banks operating in public, private and multi-state cooperative banks since the p-value is <0.05. Thus we conclude that H6 is accepted since there is a statistically significant difference on all the

performance indicators in case of public, private and multi state cooperative banks Further it is observed that the performance of private sector banks is better, as compared to public sector banks and multi-state cooperative banks.

In the case of the second hypothesis to test relationship between bank performance indicators and return on asset, it is observed that in case of public sector banks capital adequacy ratio and net interest margin is positively correlated where as non performing asset is negatively correlated, incase of private sector banks it is observed that total advance to total assets, profit per employee, net interest margin and credit deposit ratio is positively correlated, whereas in case of cooperative banks total advance to total assets, profit per employee and net interest margin is positively correlated.

Thus in the case of H7 we conclude that the alternate hypothesis is accepted since there is a significant relationship between bank performance indicators with the return on asset in case of public sector banks with respect to profit per employee, net interest margin, interest income to total income and non performing asset, in case of private sector banks with respect to total advance to total assets, net interest margin and non performing assets and in case of multi state cooperative sector banks with respect to net interest margin and interest income to total income.

In the case of third hypothesis it is observed that all service quality dimensions in case of public, private and multi state cooperative banks has a significant relationship with customer satisfaction since the p-value is either <0.01 or <0.05 level of significance. Thus we conclude that H8a is accepted since there is a significant relationship between service quality dimensions with customer satisfaction in case of public, private and multi state cooperative banks.

In the case of fourth hypothesis it is observed that all service quality dimensions in case of public, private and multi state cooperative banks has significant relationship with customer loyalty since the p-value is either <0.01 or <0.05 level of significance. Thus we conclude that H8b is accepted since there is a significant relationship between service quality dimensions with customer loyalty in case of public, private and multi state cooperative banks.

In the case of fifth hypothesis it is observed that customer satisfaction has a significant relationship with customer loyalty in case of all three categories of banks since the p-value is significant, further it is observed that there is a significant relationship between satisfaction of the customer and loyalty pertaining to all categories of banks since p-

value is significant. Thus we conclude that H8c is accepted since there is a significant relationship between customer satisfaction with customer loyalty in case of public, private and multi state cooperative banks.

In the case of sixth hypothesis it is observed that there is a significant relationship between service quality and financial performance in case of public, private and multi state cooperative sector banks since the p-value is significant. Thus we conclude that H8d is accepted since there is a significant relationship between service quality with the financial performance in case of all three categories of banks.

In case of the seventh hypothesis it is observed that there is a significant relationship between customer satisfaction with the financial performance pertaining to all categories of banks since the p-value is significant. Thus we conclude that H8e is accepted in case of all categories of banks since there is significant relationship between service quality and financial performance.

In the case of eight hypotheses it is observed that there is a significant relationship between customer loyalty and financial performance in the case of all three categories of banks since the p-value is significant. Thus we conclude that H8f is accepted in case of public private and multi state cooperative sector banks since there is a significant relationship between customer loyalty and financial performance in all three categories of banks.

Chapter Nine
Findings Conclusion and Suggestion

This chapter provides major findings of the study pertaining to public, private and multi-state cooperative banks, conclusion of the study, specific suggestions sector wise to the bank managers and policy makers, limitations of the study, theoretical contributions and directions for further research to make the banking sector more efficient and effective.

The main purpose of this research study is to identify the service quality gaps that arise on account of service expectation and perceptions of the customers as regards various services offered by public, private and multi-state cooperative banks to their customers and also analyze the satisfaction level of the customers towards various modern services offered by the banks. The study is also taken to evaluate the relationship between the dimensions of service quality with the satisfaction of customers and their loyalty and to evaluate its impact on the financial performance among various categories of banks. This chapter presents the major findings of the study and brings out some suggestions for the bank management to improve on their services. The research study has come out with some theoretical contribution to the existing literature and has also suggested managerial contribution which will benefit the banks in general and the customers in particular.

9.1 Major findings of the research

The study on service quality offered by the banks to their customers operating in various sectors is an attempt to judge the impact of various service quality dimensions on the satisfaction levels of the customers with customer loyalty and the financial performance of public, private and multi-state cooperative sector banks. Based on the survey undertaken on the bank customers and the relevant secondary data collected, the analysis was done with the help of various statistical tools to test the hypothesis for the study, based on the results of the study, major findings of the research were found which are given in the following paras.

In case of Public sector banks

- The results of the study indicate that the customers of public sector banks have low perception on all seven dimensions of service quality, whereas their expectations are very high, resulting in a service gap on all dimensions of service quality, these results are in accordance with the studies done by Dash and Kumar (2009), Jayaraman & Munusamy (2010); Mosahab et al., (2010); Jyoti Agarwal (2012).
- As regards bank infrastructure dimension, highest gap score is observed for 'infrastructural facilities being visually appealing' and the lowest gap score for 'banks having modern equipments and facilities'.
- In the case of employee assurance dimension, highest gap score is observed for 'employees of the bank did not possess required knowledge to facilitate the customers' and the lowest gap score is 'the method of communication with the customers'.
- With regard to employee empathy dimension, it is observed that highest gap score is for 'employees were not willing to clear the doubts of the customers' and the lowest gap score for 'employees were responding quickly to customer complaints'.
- In the dimension of employee trust highest gap score pertains to 'employees didn't deliver their work in time' whereas lowest gap score is that the 'customers had trust in the employees of the banks'.
- As regards bank employee commitment dimension it is observed that highest gap score pertains to 'employees were not prompt in providing services to the customers' whereas the lowest gap score is that 'employees communicated with the customer on a constant basis'.
- For the dimension of modern services, it is observed that highest gap score is, 'banks were reluctant in providing wide range of modern services to its customers from time to time' and the lowest gap score is that the 'banks website offered financial records and statements to their customers'.
- As regards the transaction security dimension, highest gap score is that the 'transactions with the banks were not safe and secure' and the lowest gap score for the 'banks maintaining accurate records'.

- The summarised maximum gap score for service quality in case of public sector banks related to service expectation and perception is bank infrastructure and modern services, whereas lowest gap score is observed in the dimensions of employee trust and employee empathy.
- With regard to satisfaction level of the customers pertaining to the various services offered by public sector banks it is observed that, there is a high level of satisfaction of the customers towards services like debit cards, ATM, NEFT/RTGS and mobile banking, whereas the customers were moderately satisfied with the other services offered by the public sector banks.
- The outcome of the study clearly signifies that all the dimensions of service quality have a significant relationship with customer satisfaction. The dimensions of employee empathy, employee trust and transaction security have a significant positive relationship with the satisfaction of customers in public sector banks, similar results were identified by Saiful Islam & Md Borak Ali (2011). However, the dimensions of commitment, approach of the employees and bank infrastructure have no significant relationship with the satisfaction of customers.
- The results further suggests that service quality dimensions has a direct & positive relationship with customer loyalty, the said results are in line with studies done by Caruana (2000); Curry Penman (2004); Harington & Weavan (2009); S.J.Manjunath and Aluregowda (2013) and further it is observed that dimension of employee trust only had a positive relation with customer loyalty in case of public sector banks, whereas the other dimensions didn't had any impact on loyalty.
- The results exhibited that age, marital status, occupation, income, frequency of visit and number of years being customer of the bank, have no significant difference in the satisfaction level of the customers about service offered in case of public sector banks.
- The results further indicated that in case of gender of the customers, the satisfaction level among female customers is higher than, that of male customers and in case of place of residence it is observed that the satisfaction level of urban customers is higher as compared to rural customers.

- In case of public sector banks it is observed that the proportions of capital adequacy ratio, total advance to total assets, interest income to total income and non performing assets are higher as compared to private and cooperative banks.
- Further it is observed that capital adequacy ratio and net interest margin have positive correlation with return on asset, whereas NPA had negative correlation with ROA.
- The study clearly indicates that there is statistically a significant relationship between the dimensions of service quality with the satisfaction of customers and also loyalty of the customers since the p-value is <0.05. The said results comply with the findings of Chang and Sans (2005); Jham and Khan (2005); Al Hawari and Ward (2006); Akroush (2008); Fatemeh Karimi et al., (2014); Torabi Zahra and Mahmoudi Edris (2016)
- Further from the study it can be inferred that there is a significant relationship between satisfaction of the customers and loyalty since the p-value is <0.05, the said findings of the study comply with the findings of Veloutsou et al.,(2004); Mesay Sata Shanka (2012); Ariful Islam et al.,(2013); Feras Mi Alnaser et al.,(2017); Daniel kasser Tee et al.,(2018).
- The relationships between service quality dimensions and financial performance of public sector banks is not found to be statistically significant since the p-value is >0.05, these findings are in line with studies done by Meshach Goyit and Teresa Nmadu (2016); Mbama & Cajetan (2018)

In case of Private sector banks

- The descriptive statistics related to expectation and perception of the customers of private sector banks indicate that a service gap exist on all seven dimensions of service quality, since expectations of customers are higher than their actual experience with the service provider. The said findings are in line with the studies done by Dash and Kumar (2009); Jayaraman Munusamy (2010); Mosahab et al., (2010); Jyoti Agarwal (2012).
- The study revealed that in the case of bank infrastructure dimension, the highest gap score is observed for ‘materials related to services were not visually appealing, and the lowest gap score for ‘banks had appealing infrastructural to facilitate its customers’.

- Further in relation to the dimension of employee assurance, highest gap score is observed for ‘employees didn’t give individual attention to customers’ and the lowest gap score for ‘employees of the bank were polite to the customers’.
- In the dimension of employee empathy, it is observed that highest gap score is for ‘employees were not willing to clear the doubts of the customers’ and the lowest gap score for ‘operating hours of the banks are convenient to customers’.
- It is observed that for dimension of employee trust, the highest gap score is for ‘employees were not delivering their work in time’ whereas the lowest gap score is, ‘the customers had trust in the employees of the banks’.
- With regard to employee commitment dimension it is observed that the highest gap score for ‘employees were not prompt enough in providing services to the customers’ whereas the lowest gaps score is for ‘employees were willing to help the customers’.
- For the dimension of modern services, it is observed that highest gap score is for ‘personal accounts were not updated and accessed via internet and ATM’, whereas the lowest gap score is for ‘banks were offering modern banking facilities to its customers’.
- In relation to transaction security dimension, it is observed that the highest gap score is for ‘banks were unable to keep customers records accurate and up to date’ and the lowest gap score for ‘transactions with the banker were safe and secure’.
- The summarised maximum gap score for service quality related to service expectation and perception in case of private sector banks is for the dimensions of employee commitment and employee empathy, whereas minimum gap score is observed in the dimensions of modern services and bank infrastructure.
- With regard to satisfaction level of the customers pertaining to services offered by private sector banks it is observed that, the customers were highly satisfied with services like credit cards, E-cheques, telephone and internet banking, whereas the customers were moderately satisfied with the other services offered by the banks.
- The result of the study indicates that the dimensions of service quality had a positive relationship with customer satisfaction, these result comply with the findings of Cronin and Taylor (1992); Spreng and Mckoy (1996); Humayoun

Naeem et al., (2009); Daniel and Kaser (2018). The dimensions of employee empathy, employee trust and transaction security have a significant positive relationship with the satisfaction of customers. However, the dimensions of commitment, approach of the employees and bank infrastructure seem to have no significant relationship with the satisfaction of customers.

- The study revealed there is a direct positive relationship of service quality with customer loyalty in case of private sector banks, the said results are in line with Caruana (2000); Curry Penman (2004); Harington & Weavan (2009); S.J.Manjunath and Aluregowda (2013). The dimensions with positive relationship were employee empathy and modern services whereas the other dimensions didn't have any positive relationship.
- From the study it is observed that residence of the customers, marital status, occupation and number of years being customer of the bank, have no significant difference in the satisfaction level pertaining to service quality offered by the private sector banks.
- The study revealed that customers in the lower age groups were highly satisfied as compared to customers of higher age group, whereas in the case of gender it is observed that the satisfaction level of male customers were better as compared to female customers, further it is also observed that for place of residence the satisfaction level of urban customers is better as compared to rural customers.
- The result exhibited that the customers of private sector banks having higher income are highly satisfied as compared to customers in the lower income group and further the customers who are graduated and above are highly satisfied as compared to customers with less educational qualification with regard to service quality.
- It is also observed that in the case of occupation of the customers pertaining to private sector banks the satisfaction level of customers working in government departments, professionals and students is better as compared to customers of other occupation for various services offered.
- The results of financial performance reveal that the proportions of net interest margin, credit deposit ratio and investment ratio is higher and the percentage of NPA's is the lowest in case of private sector banks as compared to public and cooperative sector banks

- Further it is observed that total advance to total assets, profit per employee, net interest margin and credit deposit ratio have a positive correlation with return on asset in case of private banks.
- It is also observed that there is a statistically significant relationship between the constructs of service quality with customer satisfaction and customer loyalty since the p value is >0.05, these findings are in line with the studies done by Chang and Sans (2005); Jham and Khan (2005); Alhawari and Ward (2006); Akroush (2008).
- Further it is observed significant relationship exist between satisfaction of the customer and loyalty and further it is observed that significant relationship between customer satisfaction and financial performance of private sector banks since the p-value is <0.05, the findings are in line with studies done by Hallowel (1996), Ghannadian and Goswami (2004), Chi and Gursoy (2009), Sajad Shah Hosseini (2016).
- The relationships between service quality and financial performance in the model were not found to be statistically significant since the p-value is >0.05, these findings comply with the studies done by Meshach Goyit and Teresa Nmadu (2016); Mbama & Cajetan (2018)

In case of Multi-state cooperative sector banks

- Based on the analysis of the study it is observed that the customers of multi-state cooperative sector banks have high expectations on all seven dimensions of service quality, whereas their actual experience pertaining to services rendered is very low, thus resulting in a gap on all dimensions of service quality, the following researchers also came across similar findings Dash and Kumar (2009), Jayaraman Munusamy (2010), Mosahab et.al (2010), Jyoti Agarwal (2012).
- For the bank infrastructure dimension, it is observed that the highest gap score is for materials related to services were not visually appealing and the lowest gap score for the banks had modern equipments and facilities.
- Further as regards employee assurance dimension, it is observed that highest gap score is that ‘employees behaviour didn’t instil confidence in the minds of the customers’ and the lowest gap score is for ‘employees of the bank had require knowledge to render services to its customers’.

- It is observed that in case of employee empathy dimension, the highest gap score is for ‘employees were reluctant to clear the doubts of the customers’ and the lowest gap score is that the ‘operating hours of the bank were suitable to its customers’.
- The highest gap score for employee trust dimension pertains to ‘employees were not delivering services to customers as early as possible’ whereas lowest gap score is that the ‘customers had trust in the employees of the banks’.
- In relation to employee commitment it is observed that the highest gap score pertains to ‘employees were not readily willing to help the customers’ whereas the lowest gap score is for ‘employees were prompt in providing better services to its customers’.
- The analysis of the study in case of modern services, observed that highest gap score is that the ‘banks were not providing wide range of modern services to its customers from time to time’ and the lowest gap score for ‘banks are offering modern services to its customers 24*7 & hassle free’.
- In the transaction security dimension, it is observed that the highest gap score is for the banks were not maintaining accurate records and the lowest gap score is for transactions with the bank were safe and secure
- The summarised maximum gap score for service quality related to expectation and perception of service in case of multi-state cooperative sector banks were for the dimensions of employee commitment and modern services, on the other hand minimum gap score is observed for dimensions of employee trust and transaction security.
- The study exhibited that the satisfaction level of the customers pertaining to services offered by multi-state cooperative sector banks to their customers were moderately satisfied or had low level of satisfaction as compared to public and private sector banks.
- The result of the study indicates that the service quality dimensions are significantly associated with the satisfaction level of the customers, the findings comply with the works done by Cronin and Taylor (1992); Spreng and Mckoy (1996); Humayoun Naeem et.al (2009); Daniel and Kaser (2018). The dimensions of bank infrastructure, modern services and transaction security have a significantly positive relationship with the

satisfaction levels of the customers in multi-state cooperative sector banks. However, the dimensions of commitment, approach, trust and empathy seems to have no significant relationship with the satisfaction of the customers.

- It is also observed that customer loyalty has a direct positive relationship with service quality in case of multi-state cooperative banks; the results are in line with studies done by Caruana (2000); Curry Penman (2004); Harington & Weavan (2009); S.J.Manjunath and Aluregowda (2013). The dimensions of employee approach and employee empathy has a positive relation with customer loyalty.
- The study revealed that demographics like age, residence of the customers, marital status, income and occupation has no significant difference in the satisfaction level pertaining to service quality offered by the cooperative banks.
- Further it is observed that the satisfaction level of female customers is higher as compared to male customers and customers who are graduates and above are highly satisfied as compared to customers with less educational qualification pertaining to service quality offered by the multi-state cooperative banks.
- The study also revealed that the customers who visited the branch either weekly or monthly, their satisfaction level is better as compared to other groups pertaining to service quality, further it is also found that the satisfaction level of customers towards service quality increases as per passage of time, the customer interacts with the banker, here the satisfaction level of the customers is highest for those who have been with the bank for 10 years and more and vice versa satisfaction is low, who have been the customer of the bank for less than a year.
- The analysis exhibits that in case of multi-state cooperative sector banks the return on asset is higher as compared to public and private sector banks
- Further it is observed that capital adequacy ratio, total advance to total assets, profit per employee and net interest margin has positive correlation with ROA.
- From the study it can be inferred that there is a statistically significant relationship between the service quality dimensions with both, customer satisfaction as well as customer loyalty, the said findings comply with the

studies done by Chang and Sans (2005); Jham and Khan (2005); Al Hawari and Ward (2006); Akroush (2008).

- Further it is also observed that there is statistically significant relationship between customer satisfaction and financial performance in case of multi state cooperative sector banks since the p-value is <0.05, the findings are in line with the studies done by Hallowel (1996); Ghannadian and Goswami (2004); Chi and Gursoy (2009); Sajad Shah Hosseini (2016).
- The relationship between service quality and financial performance in the model were not found to be statistically significant since the p-value is >0.05, these findings comply with the studies done by Meshach Goyit and Teresa Nmadu (2016); Mbama & Cajetan (2018)

9.2 Conclusion

Providing quality services to customers is no longer a matter of value addition, it is today considered to be the basic requirement to sustain and survive in the competitive world. The banks should recognize this aspect and should focus their attention to get satisfied and loyal customers, thereby ensuring good results. After a scientific and descriptive research, it has being observed that customers across various categories of banks are more or less satisfied with the service quality provided by their respective banks. Thus it can be said that service quality is a continuous journey and not a destination. The perceptions of the customers do change, in response to changes in business as well as the external environment. The banks need to frequently carry out research studies to know and understand quality perceptions of the customers and initiate changes or improvements in the services offered, this requires commitment and dedication of the management as well as the employees.

The first objective was to analyze the expectation and perception of the customers towards service quality offered by public, private and multi-state cooperative banks. From the study it is evident that gap exists on all seven dimensions of service quality and such gap varies from sector to sector. Thus bank managements are expected to take necessary steps to reduce the gap and ensure satisfaction in the minds of the customers.

The second objective of the study was to analyze the influence of service quality offered by the banks on both customer satisfaction as well as customer loyalty; the study concludes that there is a statistically significant correlation between all seven

dimensions of service quality with customer satisfaction and customer loyalty across all categories of banks, further it is observed that in case of public sector banks the dimension of empathy and trust were significant, in case of private sector banks the dimensions of infrastructure, modern services and transaction security were significant, whereas in case of multi state cooperative banks the dimensions of assurance and trust were found to be significant that contributed towards achieving satisfaction among the bank customers. For determining the dimensions that contribute towards achievement of customer loyalty, it is observed that, dimensions of employee trust is significant in case of public sector banks, in case of private sector banks dimensions of employee empathy and modern services were significant and in case of cooperative banks it is the dimension of employee approach that contributed towards loyalty of the customers.

The third objective of the study was to examine the relationship between demographic variables of the respondents with the satisfaction level towards respective banks. From the results it is observed that based on the demography of the customers, their satisfaction level varies, thus the banks should design customised services for various income and age groups, customers residing in urban and rural areas, customers having different occupations and educational qualification, etc. These initiatives from the banks will help in attracting new customers and also retain the present customers.

The last objective of the study was to test the relationship among four constructs i.e. service quality, customer satisfaction, customer loyalty and financial performance of the banks. The results revealed that, there is significant association between service quality with both customer satisfaction as well as customer loyalty among all three categories of banks. Further it is observed that there exist significant relationship between satisfaction of the customers and customer loyalty in respect of public and private sector banks, further it is observed that there is also significant relationship between service quality with the financial performance of the banks and it is also observed that there is a significant relationship between customer loyalty and financial performance in case of all three categories of banks.

Thus to conclude, it can be said that the theoretical framework and the findings of the study may prove to be beneficial to the bank managements in particular to improve upon their services by reducing the gaps and thereby improve the satisfaction level of the customers, which may lead to loyalty and further may help in improving the financial performance of the banks. This study would evidently act as a pointer to the

bank managements to render quality service to their customers, who will in turn be benefited to a greater extent. Thus the findings of the study become beneficial in understanding how customers effectively respond to services provided and what is the ultimate effect on the financial performance of the banks.

9.3 Suggestions

Based on the major findings identified in the study, the researcher has made few suggestions to the managements of Public, Private and Multistate cooperative sector banks to improve their quality of service and facilitate customers in a better way to satisfy and retain them. The suggestions are highlighted as below:

For Public sector banks:

- They should improve upon infrastructural facilities, by creating a good ambience, to facilitate customers in a better way by using latest technology and ensure that employees are well dressed and neat to provide effective services.
- Further they should ensure that their employees have adequate knowledge about various services rendered to their customers and wherever possible try to give individual attention to answer the doubts and queries of their customers.
- To retain existing customers and attract new customers, the public sector banks should have customer's best interest at heart and inculcate among its employees the habit to help the customers in the best possible manner.
- The employees should provide prompt services and ensure that the work of the customers is done within the stipulated time and try to deliver the services effectively for the convenience of its customers.
- The management of the public sector banks are expected to provide wide range of modern services with emphasis on mobile banking, internet banking for the benefit of the customers to do banking at ease and convenience, further the public sector banks should impress upon their bank customers having high security and safety standards regarding their investments and savings.

For Private sector banks:

- The management of private sector banks have to ensure that the materials pertaining to new services must be properly displayed in the branch for the

better understanding of the customers and their convenience, further these pamphlets, brochures and handouts should be visually appealing to them.

- The behaviour of the employees should be such, that it will help in instilling confidence in the minds of the customers which will lead to customer satisfaction and possibility of more business to the banks, further as far as possible employees should try to clear the doubts of the customers and individual attention should be given wherever necessary to facilitate the customers.
- The employees are expected to inform the customers, the time taken for completion of work and they should be in a better position to deliver the work as early as possible to avoid wastage of time and energy of the customers.
- They are expected to update personal pass books of the customers or should have an access through internet and ATM to know the status of their accounts.
- The bank employees should ensure that customer records, statements or any other correspondence are accurate and the data should be updated.

For multi-state cooperative sector banks:

- The multi-state cooperative sector banks should give wide publicity about its new products and services by properly displaying pamphlets, brochures and handouts in the branch, which should be visually appealing to the customers and further try to improve upon infrastructural facilities for the betterment of the customers.
- As far as possible the employees should try to give individual attention to the problems and difficulties faced by the customers while transacting with the banker and should ensure confidence in their minds to do business with them.
- The employees of the bank should be readily willing to clear the doubts of the customers, should respond positively to customer complaints and should inform them when the work shall be done.
- The bank management should ensure that proper infrastructural facilities are in place, whereby personal accounts are updated regularly and they should ensure modern services like internet banking mobile banking to facilitate the customers in a better way.

- The bank employees are expected to maintain secrecy of records of the customers and should ensure that the records are updated and accurate.

General Suggestions:

- Bank employees should quickly and efficiently respond to problems of the customers and should speak to them politely while resolving their issues.
- To improve service quality the banks should give individual attention to their customers and understand their specific needs.
- The commercial banks should create fast track complaint handling mechanism to redresses customer grievances.
- The customers have different expectations as they are differently satisfied, thus banks need to provide customized products & services to satisfy them.
- Most of the banks operating in different sectors and serving the same markets are likely to have similar product & services, thus to differentiate them from others each bank should make sincere efforts to rebuild their brand perception among their customers.
- Management of the commercial banks should pay attention to staff soft skills, knowledge, proper attention to customers, understand their needs, offer them fast and efficient services.
- To improve upon customer satisfaction in the banking services, they should have confidentiality of transactions, trustworthiness and extension and flexibility in the working hours.
- The employees who are directly linked to service delivery should be trained in order to tackle routine and varying situations, especially at the front office.
- Customer care is an important area and produces a direct impact on customer satisfaction. The banks should take efforts to offer best customer care services.
- Services counter should be increased so that customers can avoid standing in long queues and there should be a separate counter for senior citizens to address their needs.
- Basic amenities like parking space, sitting arrangement, toilet facility, drinking water, adequate fans and tube lights, air conditioners, table or desks etc. should be a focus area of the banks.

- Banks should provide adequate number of ATM counters for withdrawal of money, depositing money and pass book printing kiosks, which should be guarded 24*7.
- Banks needs to create awareness about the availability of banking products and services, how to operate and their benefits. To do this, banks can organize exhibitions and talk shows for creating awareness among customers.
- Government should provide an adequate regulatory framework to ensure customer protection, security of their funds and transactions with the banker.

9.4 Limitations of the study

1. It was difficult to collect the data of customers pertaining to the banks under study from all the states in the country on account of time constraint.
2. For collection of primary data the researcher has used convenience sampling method as banks were unwilling to share the information about customers' profile on account of privacy policy.
3. The primary and secondary data collected pertain to only five banks each operating in public, private and cooperative sector banks in India.
4. One of the issues of service quality based studies is the expectations and perception of the customers can be compared only after the service is actually delivered, but in reality the expectations are formed much before the actual delivery of service.
5. Further, the expectations of customers are usually based on some previous service experiences, thus it is quite possible that the expectations may change with every instance of service delivered which also affect the perception of the customers. Thus under such circumstances it is possible that for the same service, customers shall have different levels of expectations and perception for every instance of delivery of the same service (Oh, 1999). This shall result in loss of internal validity for the tool over a period of time.

9.5 Theoretical Contributions

The theoretical contributions of this research, mainly spring out from a huge contribution made in the area of services marketing literature. Several studies were reviewed and cited to build the body of knowledge. The studies reviewed proved that, there is a significant relationship between service quality offered by the banks,

satisfaction level of the customers as well as customer loyalty pertaining to different sectors. This study gave further support to the hypotheses put forth by this research that studies the perceived service quality, customer satisfaction, customer loyalty and financial performance across various categories of banks. The said research has contributed to the theory as follows:-

- The study began with the original dimensions of service quality proposed by Parasuraman et al., (1988). The dimensions included were tangibility dimension, reliability dimension, responsiveness dimension, assurance dimension and the empathy dimension of service quality. Moreover, this study proposed modern services as an additional dimension for the first time since service quality has been investigated. The exploratory analysis of this study revealed seven distinct dimensions of service quality which are bank infrastructure, employee trust, employee commitment, employee assurance, employee empathy, modern services and transaction security.
- Another contribution of the study is that there are differences in terms of gender, income and academic qualification of the customers in evaluating the perceived service quality and customer satisfaction in public, private and multi-state cooperative banks. The results of the study show that female customers are highly satisfied than their male counterparts in case of public and cooperative banks and vice versa male customers are highly satisfied compared to female customers in case of private sector banks. Further with regard to income of the customers it is observed that customers in the higher income bracket are comparatively satisfied than the customers in low income bracket, the said results contradict the findings of Ushad Subedar Agathee (2010). As regards educational qualification it is observed that customers who are graduates and above are comparatively satisfied than the customers who are under graduates, these findings are in line with Urban and Pratt (2000). These findings are valuable since bank managers can come up with better banking services which are tailor made to each category of customers.
- The relationship among constructs of service quality, customer satisfaction, customer loyalty and financial performance of the banks has been discussed in the literature. However, there is dearth of research that incorporates all four constructs into a model, particularly in the banking sector in India. Further there

is no evidence of the integrative model being investigated in the case of public, private and multi-state cooperative banks. Thus the present study investigated the relationships among the four constructs which provided a more accurate and comprehensive picture of the nature of their relationships. Therefore this research study makes a contribution by empirically testing the conceptual model in a developing economy like India having variety of cultures, languages and economic backgrounds. Thus, the findings of this research shall provide different perspectives to the existing literature.

- Another important theoretical outcome of this study is that, there is a statistically significant relationship between customer satisfaction and the financial performance in the case of all three sectors of banks. The results of the study are consistent with the works done by Duncan & Elliot (2004) and Karray & Chicht (2013) that banks should explore ways to be more technically efficient and the bank managers should also seek better ways of meeting customers need thereby increasing customer satisfaction and contributing towards banks financial performance.
- The outcome of the study has resulted into formulation of conceptual logic service quality chain model. The study has proved that providing of quality services to customer leads to increase in their satisfaction levels, which further helps the banks in increasing the financial performance of the banks. Further it is also seen that provision of quality service leads to loyalty of the customers and further helps in increasing the financial performance of the banks.

9.6 Managerial Implications

The contributions of this research are not limited to theoretical or academic aspects, but it includes managerial considerations as well. The research findings not only shall add value to the existing body of knowledge but will be of great help to managements of various banks. The results of the study can be used as critical guidelines for the banks to manage and improve the service quality and boost the satisfaction levels of the customer. The recommendations of the study would help the banks to work effectively in this dynamic industry of competition and challenges. The research work done was able to bring out several implications through the findings where the bank management are expected to play a crucial role as an evaluator to study and understand the service

quality dimensions that help in influencing customer satisfaction and stand a chance to gain loyalty, which may or may not affect the financial performance of the banks in the long run.

The various managerial implications of the study are as follows:

- From the study it is evident that a gap exists on all dimensions of service quality pertaining to public, private and multi- state cooperative banks. It is further observed that overall maximum service gap was observed in the Public sector banks, followed by Multi-state cooperative banks and lastly in Private sector banks. Thus the public sector banks have to face the brunt of competition which may either force them to merge or close their banks.
- The results of the study have identified seven unique dimensions of service quality. The bank management has to adopt a multi-level approach to strategically plan and train their employees to evaluate the perception of their customers pertaining to services offered. Further the dimensions of service quality may vary from bank to bank. Thus it is the duty of the bank managers to note the dimensional structures identified in this study and should reconfigure their own specific banking organizations.
- This research confirms the positive relation between all the services quality dimensions with customer satisfaction. Thus banks are advised to use this instrument to access the banks services quality and are expected to emphasize all the services quality dimensions in maintaining and improving their services. In case of Public sector banks dimensions like employee empathy, employee trust and transaction security shows statistically significant relationship with customers' satisfaction, whereas in case of Private sector banks dimensions like bank infrastructure, modern services and transaction security have significant relationship with customer satisfaction whereas in case of Multi-state cooperative banks dimensions like employee approach, employee trust and transaction security shows statistically significant relationship with customer satisfaction.
- From the banks point of view, to sustain the competition, they have to retain, attract more customers and try to achieve loyalty. In this study it is observed that there is a significant association between service quality dimensions and customer loyalty. In the case of public sector banks the dimension of employee

trust, in case of private sector banks dimensions like employee empathy and modern services, whereas in case of multi-state cooperative sector banks it is observed that dimensions like employee approach and employee empathy shows statistically relationship with customer loyalty.

- From the banks point of view it is a wasteful exercise to search or attract new customers rather than retaining the existing customers (Schlesinger & Heskett, 1991). Thus banks need to re-look, re-scrutinize and re-examine their objectives in providing services, whether they are comprehensive enough to fulfil the customers' expectations. This research study brings out areas, the banks need to focus which include, promises made to customers' needs to be fulfilled, provide prompt services, assistance from the employees, flexible timings, stress on modern services, good infrastructure and improved and upgraded facilities to the customers from time to time.
- Since the expectations of bank customers are not fulfilled bank managers are expected to organize employee training programmes to improve their skill and efficiency and solve their problems comprehensively. Training programmes should comprise different aspects like interpersonal skills, communication skills, customer care, up to date knowledge, dressing sense, handling systems in the banks etc. All these aspects shall help to raise the customers' satisfaction level, extend the customers tolerance in case of service failures, increase recommendations of banks and finally help in increasing customer loyalty.
- As per the outcome of the study, with regard to the perception of the bank customers, it has become imperative for the bank to treat them fairly at all times. The service requirements and issues brought out by the customers should be dealt with courtesy and to be done in time. Further the bank need to build appropriate procedures and need to upgrade their employees' knowledge with latest technological knowhow and gadgets to build and sustain a very healthy and long-term relationship with their customers. The customers of the banks are usually burdened with long procedures and too much of paper work, thus a small help from the employees of the bank will go a long way in facilitating them in a better way, putting them at ease and also shall help to gain their confidence.

9.7 Directions for further research

Although this research reveals certain aspects of service quality and financial performance with its effect on customer satisfaction and customer loyalty in the context of different categories of banks in India, there is a lot of scope for future research in

order to ascertain and enrich the quality of service across banking sector services in India:

- Instead of focussing on nationalised, private and foreign banks, further studies may be taken up on State cooperative banks and Credit Cooperative Societies in different States of India.
- A comparative study to analyse branch to branch banking services, thereby taking into consideration the same aspects of study.
- The perception of employees of the banks should also be taken into consideration to make study more meaningful and interesting.
- A comparative study can be made between service quality perceptions of customers residing in urban and rural parts of India so as to prepare an appropriate marketing strategy by the banks.

Bibliography

A.K.Paswan, Spears, N., Hasty, R., & Ganesh, G. (2004). Search quality in financial service industry: a contingency approach. *Journal of service marketing , 18* (5), 324-338.

Abednego Feehi Okeo, J. S. (2013). Service Quality in Banking Sector in Ghana. *International Journal of Marketing studies , 5,* 81-92.

Abedniya, A., & Zaeim, M. N. (n.d.). Measuring the perceived service quality in the islamic banking system in Malaysia.

Agarwal, J. (2012). Customer satisfaction in Indian Banking services: A study of Aligarh District. *International Journal of computing and Business research , 3* (1), 01-14.

Agathee, U. S. (2010). An assessment on service quality in the Mauritian banking sector. *International Research Symposium in Service management* , 1-16.

Ahmad, A., & Bashir, M. (2010). Relationship between Service Quality and performance of Islamic banks in Pakistan. *Interdisciplinary Journal of contemporary research in Business , 2* (7), 193-199.

Ahmed, A., Rehman, K.-u., & Safwan, N. (2011). Testing a model of Islamic banking based on service quality, customer satisfaction and bank performance. *African Journal of Business Management , 5* (5), 1880-1885.

Akhtar, N. M., & Hinjra. (2011). Relationship between customer satifaction and service quality of Islamic banks. *World appliede Sciences journal , 13* (3), 453-459.

Akroush, M. (2008). Exploring the meditating effects of service quality implementation on the relationship between Service quality and performance in the banking industry in Jordan. *Global Business and Economic Review , 10* (1), 98-122.

Al Hawari, M. (2008). The influence of traditional service quality factors on customer satisfaction: A practical study within the context of Australian banking. *The Business Review, Cambridge , 11* (2), 114-119.

Al-Fazwan, M. (2005). Assessing sevice quality in Saudi Bank. *Journal of King Saud University* , 101-115.

Al-Hawari, M., & Ward, T. (2006). The effect of automated service quality on Australian banks' financial performance and the mediating role of customer satisfaction. *Marketing International planning , 24* (2), 127-147.

Alnaser, F. M., Ghani, M. A., Rahi, S., Mansour, M., & Abed, H. (2017). The impact of SERVQUAL model and subjective norms on customer satisfaction and customer Loyalty in Islamic Banks:A cultural context. *International Journal of economics and management science , 6* (5), 1-7.

Amin, M., & Isa, Z. (2008). An examination of the relationship between service quality perceptions and customer satisfaction: a SEM approach towards malaysian Islamic banking. *International Journal of Islamic and Middle Eastern finance and Management , 1* (3), 191-209.

Anand, V. S., & Selvaraj, M. (2012). The impact of service quality on customer satisfaction and loyalty in Indian Banking Sector: An Empirical study through SERVPERF. *International Journal of Management and business research , 2* (2), 151-163.

Anand, V., & Selvaraj, M. (2012). The impact of service quality on customer satisfaction and loyalty in Indian Banking sector: An empirical study through SEVPERF. *International Journal of management & Business research , 2* (2), 151-163.

Ananth, A., Ramesh, R., & Prabhaharan, B. (2010). A service gap analysis in private sector banks-An empirical study of cutomer expectation and perception. *Srilankan Journal of Management* , 44-53.

Anber Abraheen Mohammed, S. (2011). Service quality perspectives and customer satisfaction in commercial banks working in Jordan. *Middle eastern finance and economics* .

Anderson, E. W., Fornell, C., & Lehmann, D. R. (1994). Customer satisfaction, market share and profitability. *Journal of marketing , 58* (3), 53-66.

Anderson, E., Fornell, C., & Lehmann, D. (1994). Customer satisfaction, market share and profitability: findings from Sweden. *Journal of Marketing , 58* (3), 53-66.

Anderson, G. (1973). Consumer Dissatisfaction:The effect of Disconfirmed Expectancy on perceived product performance. *Journal of Marketing Research , 10* (2), 38-44.

Anderson, J., & Gerbing, S. (1988). Structural equation modeling in practice:A review and recommended two step approach. *Psychological Bulletin , 103* (3), 411-423.

Angur, M., Natrajan, R., & Jahera, J. (1999). Service quality in banking industry:an assessment in a developing economy. *International Journal of Bank Marketing , 3*, 116-123.

Armstrong, G. (2002). *Principles of Marketing.* Jakarta: Erlangga.

Arora, D., & Saxena, A. (2013). Interrelationships between service quality, customer satisfaction and customer loyalty in banking sector of India:A study of Retail banking sector. *International Journal of Research in Business Management , 1* (4), 1-8.

Arora, V., Navinchandran, & Jain, N. K. (2011). Dimensionality of service quality and its critical predictors to customer satisfaction in Indian retail banking. *Advances in Management , 4* (10), 20-25.

Asad Ilyas, H. N. (2013). Assesing the service quality of banks using SERVQUAL model. *Interdisciplinary journal of cotemporary research in business* , 390-400.

Asubonteng, P., McCleary, K., & Swan, J. (1996). SERVQUAL revisited: a critical review of service quality. *Journal of service marketing , 10* (6), 62-81.

Aurora, S., & Malhotra, M. (1997). Customer satisfaction: A comparative analysis of public and private sector banks. *Decision , 24* (1-4), 109-130.

Bagozzi, R., & Yi, Y. (1988). On Evaluation of Structural Equation Models. *Journal of the Academy of Marketing Sciences , 16*, 74-94.

Bahia, K., & Nantel, J. (2000). A reliable and valid measurement scale for the perceived service quality of banks. *The international journal of bank marketing , 18* (2), 84-96.

Balaji, B. S., & Sureesh, M. (2012). Influnce of Demographic variables on banking service quality:A study of private sector banks in Chennai. *IUP Journal of bank management , 11* (1), 7--96.

Balaji, B. (2009). *Services Marketing and Management.* New Delhi: S.Chand & Co.

Baneerjee, N., & Sah, S. (2012). A comparative study of customer perception of service quality dimensions between public and private sector banks. *International Journal of Business Administration , 3* (5), 33-44.

Barbara, L. R. (1993). Service Quality:Recent Developments in Financial Services. *International Journal of Bank marketing , 11* (6), 19-25.

Bashir, M. S. (2010). Analysis of customer satisfaction with the islamic banking sector:Case of Brunie Darussalam. *Asian Journal of Business and management Sciences* , 38-50.

Bedi, M. (2010). An integrated framework of service quality, customer satisfaction and behavioural responses in indian banking industry:a comparison public and private sector banks. *Journal of services research , 10* (1), 157-172.

Bentler, p. M., & Bonnet, D. G. (1980). Significance test and goodness of fit in the analysis of covariance structures. *Psychological Bulletin , 88*, 588-600.

Berry, L., Bennett, D., & Brown, C. (1989). *Service quality:Aprofit strategy for financial institutions.* Boston: Irwin Professional Pub.

Bhat, & Mushtaq. (2005). Correlates of service quality in banks: an empirical investigation. *Journal of services research , 5* (1), 77-99.

Bitner, M. J., & Hubbert, A. R. (1994). *Service quality:New directions in Theory and practice.* sage Publications Inc.

Blanchard, R., & Galloway, R. (1994). Quality in retail banking. *International Journal of Service Industry Management , 5* (4), 5-23.

Boulding, W., Kalra, A., Staeling, R., & Zeithaml, V. (1993). A dynamic process model of service quality:From expectation to behavioural intentions. *Journal of Marketing Research , 30* (1), 7-27.

Boyd, W. L., Leonard, M., & White, C. (1994). Customer preference for financial services:an analysis. *International journal of bank marketing , 12* (1), 9-15.

Brady, M. K., & Cronin, J. J. (2001). Some New Thoughts on Conceptualising perceived service quality:A Hierarchical Approach. *Journal of Marketing , 65* (3), 34-49.

Brahmbhatt, M., & Panelia, D. (2008). An assessment of service quality in Banks. *Global management review , 2* (4), 37-41.

Brown, T. J., Churchill, J. G., & Peter, J. P. (1993). Improving the measurement of service quality. *Journal of Retailing* (69), 127-139.

Burns, A. C., & Bush, R. F. (2007). *Marketing Research* (5 ed.). New Delhi: Dorling Kindersley(India)Pvt.Ltd.

Buzzell, R., & Gale, B. (1987). *The PIMS Principles.* NewYork: The Free Press.

Caruana, A. (2002). Service quality-the effect of service qualityand the mediating role of customer satisfaction. *European Journal of Marketing , 36* (7/8), 811-27.

Chang, Zong, T., & Chen, S.-J. (1998). Market Oreintation, Service Quality and Business Profitability. *Journal of Service Marketing , 12* (4), 246-264.

Chi, C., & Gursoy, D. (2009). Employees satisfaction, customer satisfaction and financial performance: An empirical examination. *International Journal of Hospitality management , 28* (2), 245-253.

Choudhary, K. (2007). Service Quality Dimensionality:A Study of the Indian Banking Sector. *Journal of Asia Pacific Business , 8* (4), 21-38.

Christina, G., & Gursoy, D. (2009). Employee Satisfaction, Customer satisfaction and financial performance:An Empirical examination. *International Journal of Hospitality Management , 28* (2), 245-153.

Churchill, G., & Surprenant, C. (1982). An Investigation into the determinants of customer satisfaction. *Journal of Marketing Research , 19*, 491-504.

Cronin, J. J., & Taylor, S. A. (1992). Measuring service quality: A Re-examination and extension. *Journal of Marketing* , 55-68.

Crosby, Lawrence, A., Evens, R., Kenneth, & Deborah, C. (1990). Relatioship quality in service selling. *Journal of Marketing , 54* (7), 71-84.

Curry, A., & Penman, S. (2004). The relative importance of technologyin enhancing customer relationship in Banking. *Managing Service Quality: An international Journal , 14* (4), 331-341.

D.J.Urban., & Pratt, M. D. (2000). Perception of banking services in the wake of bank merrgers:an empirical study. *lournal of services marketing , 14* (2), 118-131.

Dash, M. K., & Kumar, S. (2007). Measuring customer satisfaction in the banking industry with special refernce to Service quality model. *Effulgence , 5* (2).

Dash, M., Dash, S., & Sharma, J. (2012). A study on the relationship between customer satisfaction and service attributes offered by Public sector and Private sector banks in India. *Journal of money, investment and banking* , 73-86.

Datta, K., & Datta, A. (2009). Customer Expectation and Perceptions across the Indian banking industry and the resultant financial implications. *Journal of Services Research* , 31-49.

Davoudian, F. (2010). *Survey customers' satisfaction of Refah Bank and its relationship with quality of bank services.* New York: Sage.

Devi, V., Ramlugun, H. K., & Singh, R. (2012). Assessing service quality in the Mauritian Banking Sector using SERVQUAL. *Prestige International journal of Management & IT-Sanchayan* , 115-126.

Dharmalingam, Senthil, & Kannan. (2012). Assessing service quality dimensions of new private sector banks in Tamilnadu- An empirical study. *Institute of Technology and Management , 6* (2), 1-14.

Dixit, N., & Datta, S. K. (2010). Customer perception on internet banking and their impact on customer satisfaction and loyalty:A study in Indian context. *Journal of Computing , 2* (7), 131-145.

Duncan, E., & Elliott, G. (2002). Customer service quality and financial performance among Australian retail financial istitutions. *Journal of financial services marketing , 7* (1), 25-41.

Ehigie, B. (2006). Correlates of customer loyalty to their banks:a case study in Nigeria. *International Journal of bank marketing , 24* (7), 494-508.

Fathollahzadeh, M., Hashemi, A., & Kahreh, M. (2011). Designing a New Model for determining customer value satisfaction and Loyalty towards banking Sector of Iran. *European Journal of Economics, Finance and administrative Science , 28*, 126-138.

Fornell, C. (1992). a National customer satisfaction Barometer:the swedish expirience. *Journal of marketing , 56*, 6-21.

Fornell, C., & Larcker, D. (1981). Evaluating Structural Equation Models and Unobservable Variables and Measurement Error. *Journal of Marketing Research* , 39-50.

G.Karthikeyan, S. (2011). Service Gap Analysis-A study with refernce to Public sector banks. *International journal of multidisciplinary manangement studies* .

G.S.Sureshchander, C. (2002). Determinants of customer perceived - service quality: a confirmatory factor analysis approach. *Journal of service marketing , 16* (1), 9-34.

Gan, C., & Clemes, M. (2011). An empirical analysis of New Zealand customers' satisfaction. *Bank and Bank Systems , 6* (3).

Ganesan, L., Bennett, R. R., & Dagger, T. (2008). The impact of service contact type and demographic characteristics on quality perceptions. *Journal of Services Marketing , 22* (7).

Gerrard, P. J., & Cunningham, B. (2004). Consumer switching behavior in the Asian bank market. *Journal of Services Marketing , 18* (3), 215-223.

Ghannadian, F., & Goswami, G. (2004). Developing economy banking:The case of Islamic banks. *International Journal of Social Economy , 31* (8), 740-752.

Ghosh, S. H., & Srivastava, K. B. (2009). Impact of service quality on customer loyalty, commitment and trust in the Indian banking sector. *ICFAI journal of Marketing management , 3* (3 & 4), 75-95.

Gnawali, A. (2016). Effects of service quality on customer satisfaction in Nepalese commercial banks. *The Journal Administrative of Development and studies , 24* (1-2), 1-16.

Gounaris, S., Stathakopoulos, V., & Athanassopoulos, A. (2003). Antecedants to perceived service quality:an exploratory study in the banking industry. *International Journal of bank Marketing , 21* (4), 168-190.

Goyit, M. G., & Nmadu, T. M. (2016). Service quality and profitability of banks:A study of selected Nigerian banks. *International Journal of Managerial Studies and Research , 4* (1), 29-37.

Gronroos, C. (1984). A Service Quality Model and its implications. *European Journal of Marketing , 18* (4), 36-44.

Gronroos, C. (1984). A service Quality model and its market implications. *European Journal of Marketing , 18* (4), 36-44.

H Maddern, R. S. (2011). Customer satisfaction and service quality in UK financial services. *International journal of production and operations management* .

Halil, N., Kandampully, J., & Hussain, K. (2009). Zone of tolerence for banks:A diagnostic model of service quality. *The Service Industries Journal , 29* (11), 1547-1564.

Hall, P. (1995). The Importance of Measuring Service Quality. *Bank marketing , 27* (2), 76-88.

Hallowell, R. (1996). The relationships of customer satisfaction, customer loyalty and profitability: an empirical study. *International Journal of Service Industry Management , 7* (4), 27-42.

Han, X., Kwortnik, R., & Wang, C. (2008). Service Loyalty:An integrated model and cross examination across service context. *Journal of Sevice Research , 11* (1), 22-42.

Haq, W. U., & Bakhtiar, M. (2012). Customer satisfaction: A comparison of public and private banks of pakistan. *Journal of Business and management , 1* (5), 1-05.

Herington, C., & Weaven, S. (2009). E-retailing by banks: e-service quality and its importance to customer satisfaction. *European Journal of Marketing , 43* (9/10).

Heskett, I., Lones, T., Loveman, G., & Sasser, W. (1994). Putting the Service Profit Chain to Work. *Harward Business Review ,* 164-174.

Heskett, J., Sasser, J., & Schlesinger, L. (1997). The Service Profit Chain: How leading companies Link Profit and Growth to loyalty, satisfaction and value. *New York,NY: Free Press .*

Hosseini, S. S., & Shahmooradi, B. (2016). Study the impact of customer loyalty and satisfaction on Bank's financial performance:A case study of Resalat Bank. *British Journal of Economics, Management and Trade , 12* (4), 1-11.

Howcroft, J. (1991). Customer satisfaction in Retail Banking. *Service Industry Journal* , 11-17.

Hoyer, W., & MacInnis, D. (2001). *Consumer behaviour* (2 ed.). Boston: Houghton Mifflin Company.

Hu, L., & Bentler, P. M. (1998). Fit indices in covariance structure modeling:Sensitivity to under parameterized model misspecification. *Psychological methods , 3,* 424-453.

Huseyin Arasli, S. (2005). A comparison of service quality in the banking industry: some evidence from Turkish and Greek speaking areas in Cyprus. *International Journa of Bank marketing , 23* (7), 508-526.

Hussein, & Jabnoun, N. (2006). Service quality and bank performance: A comparison of the UAE National and Foreign banks. *Finance India , 20* (1), 181-192.

Hussein, & Jabnoun, N. (2006). Service Quality and Bank Performance: A comparison of the UAE National and Foreign Banks. *Finance India , 20* (1), 181-192.

Islam, A. M., Hossain, F., Islam, R., & Siddiqui, M. H. (2013). Customer satisfaction and customer loyalty through service quality evaluated under SERVQUAL model -a study on banking industries of Bangladesh. *Science Journal of Business and Management , 1* (4), 88-97.

Islam, M., Hossain, K., Islam, M., & Siddiqui, M. H. (2013). Customer Satisfaction and customer loyalty through service quality evaluators under servqual model-a study on Banking industries in Bangladesh. *Science Journal of Business & Management , 1* (4), 88-97.

Islam, s., & Ali, B. M. (2011). Measuring service quality of banks:An empiricak study. *Research journal of Finance , 2* (4), 1-10.

J.S, D., Batra, G., & Dhyani, A. (2003). Paradigm change relationship marketing and service quality of banking service. *IBA Bulletin* , 26-32.

Jain, S. K., & Gupta, G. (2004). Measuring service quality:SERVQUAL V/s SEVPERF scales. *Vikalpa , 2*, 25-37.

Jain, V., Gupta, S., & Jain, S. (2012). Customer perception on service quality in banking sector: With special reference to Indian private sector banks in Morada Regionbad. *International Journal of Research in Finance & Marketing , 2* (2), 597-610.

Jamal, A., & Naseer, K. (2002). Customer satisfaction and Retail banking:an assessment of some key antecedants of customer satisfaction in retail banking. *The International Journal of Bank Marketing , 20* (4), 146-160.

Jham, V., & Khan, K. M. (2008). Customer satisfaction in Indian Banking sector: A Study. *IIMB management review , 28*, 84-93.

Jham, V., & Khan, K. M. (2008). Customers' satisfaction in the Indian Banking Sector:A study. *Journal of Marketing* , 84-93.

Joshua, A. J., & Moli, V. (2005). Expectation and perception of service quality in old and new generation banks. *Indian Journal of marketing* .

K, C. (2008). Service quality insights from the Indian banking scenario. *Australasian Marketing Journal , 16* (1), 48-61.

K.Ravichandran. (2010). Influence of service quality on customer satisfaction application of SERVQUAL model. *International journal of business and management* , 117-124.

Kamal Naseer, A. J. (1999). Islamic banking:a studyof customer satisfaction and preferences in Jordan. *International journal of bank marketing , 17* (3), 135-150.

Kangis, P., & Passa, V. (1997). Awareness of service charges and its influence on customer expectation and perceptions of quality in banking. *Journal of services marketing , 11* (2), 105-117.

Kangis, P., & Voukelatos, V. (1997). Private and public Banks:A comparison of customer expectations and perceptions. *International Journal of bank marketing* , 279-287.

Karatepe, O., Yavas, U., & Babakus, E. (2005). Measuring service quality of banks:Scale development and validation. *Journal of Retailing and Consumer Services , 12*, 373-383.

Karimi, F., Sajedinejad, A., & Hassannayebi, E. (2014). An empirical evaluation of the service profit chain model in Banking Industry in Iran. *Asian Journal of Research in Banking and Finance , 4* (1), 1-15.

Karry, S., & Chichti, J. (2013). Bank size and efficiency in developing countries:Intermediation approach versus value added approach and impact of non-traditional activities. *Asian Economic and Financial Review , 3* (5), 593-613.

Khan, M. (2014). Impact of service quality on customer satisfaction and customer loyalty:Evidence from banking sector. *Pakistan Journal of commerce and social science , 8* (2), 331-354.

Kimberlin, C. L., & Winsterstein, A. G. (2008). Validity and reliability of measurement instuments used in research. *Research Fundamentals , 65*, 2276-2284.

Kotler, P. (2003). *Management Marketing* (8 ed.). New Jersy USA: Prentice Hall.

Kotler, P., & Armstrong, G. (1999). *Principles of Marketing.* Englewoods Cliffs NJ: Prentice Hall.

Krunst, P., & Lemmink, J. (2000). Quality management and business performance in Hospitals:A search for success. *Total Quality Management , 11* (8), 1123-1133.

Kumar, A., & Dash, M. K. (2013). Constructing a measurement in service quality for Indian banks:Structural Equation modelling approach. *Journal of Internet banking & Commerce , 18* (1), 1-12.

Kumar, M., Kee, F. T., & Charles, V. (2010). Comparative Evaluation of critical factors in delivering service quality of banks:An application of dominance analysis in modified SERVQUAL model. *International journal of quality & reliability management , 27* (3), 351-377.

Kumbhar, V. (2011). Service quality perception and customer satisfaction in internet Banking service:A case study of Public and private sector. *4* (2).

Lai, F., Hutchinson, J., Li, D., & Bai, c. (2007). An empirical assessment and application of SERVQUAL in mainland China's mobile communication industry. *International Journal of Quality and Reliability Management , 24* (3), 244=262.

Lasser, N., Manolis, C., & Winsor, R. (2000). Service quality perspectives and satisfaction in private banking. *International Journal of Bank Marketing , 7*, 12-20.

Lau, M. C., Lam, R. A., & Chu, Y. (2013). Measuring service quality in the banking industry:A Hongkong based study. *Contemporary Management Research , 9* (3), 263-283.

Lazaros, E. K., Dimitrios, S. I., & Thalasinos, M. E. (2015). Customer satisfaction,Loyalty and Financial Performance. *International Jpurnal of Bank Marketing , 31* (4), 259-288.

Lee, M., & Hwan, I. (2005). Relationship among service quality, customer satisfaction and profitability in the Taiwanese banking industry. *International Journal of Management , 22* (4), 635-648.

Leeds, B. (1992). Mystery Shopping'offers cluesto quality service. *Bank Marketing , 24* (11), 24-27.

Leninkumar, V. (2017). An investigation on relationship between service quality and customer loyalty:A mediating role of customer satisfaction. *Archieves of Business Research , 5* (5), 1-23.

Lenka, U., Suar, D., & Mohapatra, K. (2009). Service Quality, Customer satisfaction and customer loyalty in Indian commercial banks. *Journal of Entrepreneurship , 18,* 47-64.

Levesque, T., & McDougall, G. (1996). Determinants of customer satisfaction in Retail banking. *International Journal of Bank marketing , 14* (7), 12-20.

Liang, C., Wang, W., & Farquhar, J. (2009). The influence of customer perceptions on financial services. *International Journal of Bank Marketing , 27* (2), 129-149.

Lohani, M. B., & Bhatia, P. (2012). Assessment of service quality in Public and private sector banks of India with special refernce to Lucknow city. *International Journal of Scintific and research publications , 2* (10).

Lohani, M. B., & Bhatia, P. (2012). assessment of service quality in Public and private sector banks with special reference to Lucknow. *International Journal of scietific and research publication , 2* (10), 1-7.

Lovelock, C. H. (1996). *Services Marketing.* Upper Saddle River NJ: Prentice Hall.

MacCallum, R. C., Brown, M. W., & Sugawara, H. M. (1996). Power anlysis and determination of sample size for covariance structure modeling. *Psychological methods , 1,* 130-149.

Magi, A., & Julander, C. (1996). Perceived service quality and customer satisfaction in store performance frame work. *Journal of Retailing and Consumeer services , 1,* 189-209.

Manjunath, S. J., & Aluregowda. (2013). Impact of service quality on customer satisfaction at Axis Bank. *International Journal of management and social science research* , 63-67.

Mavri, M., & Ioannou, G. (2008). Cuomer switching behaviour in greek banking services using survival analysis. *managerial Finance , 34* (3), 186-197.

Mbama, & Cajetan. (2018). Digital banking, customer expirience and banks financial performance:UK's customer's perceptions. *International Journal of Bank Marketing , 36* (2), 230-255.

Mengi, P. (2009). Customer Satisfaction with Service Quality:An empirical study of public and private sector banks. *The IUP Journal of Management Research , 8* (9), 7-17.

Minh, N. V., & Huu, N. H. (2016). The relationship between service quallity, customer satisfaction and customer loyalty:An investigation in Vietnamese retail banking sector. *Journal of Competitiveness , 8* (2), 103-116.

Mishra, S. (2014). Analyzing relationship among service quality, satisfactionand loyalty in internet banking: A study from India. *International Journal of Electronic finance , 8* (1), 57-73.

Mishra, U. D., Pattnaik, J. R., & Mohanty, A. K. (2010). Service quality Attributes Affecting Customer satisfaction in banking sector of India. *European Journal of Economics, Finance and Administrative Sciences* (24), 88-99.

Mistry, S. H. (2013). Measuring customer satisfaction in Banking sector:with special reference to banks of Surat city. *Asia pacific Journal of Marketing and management review , 2* (7), 132-140.

Mittal, V., & Kamakura, W. (2001). Satisfaction Repurchase Intent and repurchase behaviour:Investigating the moderating effect of Customer Characteristics. *Journal of Marketing Research , 38* (1), 131-142.

Mohammadi, R. A., Hamzeh, P. M., & Hosseini, F. H. (2012). The Study of the relationship between service quality, customer satisfaction and the banking performance in participation in profit and losses. *Financial Islamic studies , 1* (2), 38-49.

Mohammed rehman, M. A. (2011). Measuring service quality using serqual model: a study on PCB's in Bangladesh. *Business management dynamics* , 1-11.

Mosahab, R. (2010). Service Quality, customer satisfaction and Loyalty- A test of mediation. *International Business research , 3* (4), 72-80.

Mudie, P., & Pirrie, A. (2006). *Services Marketing Management.* USA: Butterworth-Heinemann.

Mukherjee, A., Nath, P., & Pal, M. (2003). Resource, Service Quality and performance Triade:A framework for measuring efficiency of banking services. *Journal of operations research , 54* (7), 723-735.

Mukhtar, A. (2012). Cutomer service quality perception of internet banking. *International Journal of learning & Development , 2* (2), 86-96.

Munusamy, J., Chelliah, S., & Wai, H. (2010). Service quality Delvery and its impact on customer satisfaction in the Banking sector in Malaysia. *Internation Journal of Innovation, management and Technology , 1* (4).

Muyeed, A. M. (2012). Customer perception on service quality in retail banking in developing countries - a case study. *International journal of marketing studies* .

N., A. (1994). Developing an instrument to measure service quality in branch banking. *International Journak of Bank marketing , 12* (6), 10-18.

Newman, A., & Cowling, A. (1996). Service quality in retail banking:the expirience of two British clearing banks. *International journal of Bank Marketing , 72* (2), 3-11.

Oh, H. (1999). Service quality, customer satisfaction and customer value:A holistic perspective. *International Journal of Hospitality Management , 18* (1), 67-82.

Oliver, R. (1980). Cognitive model of the antecedents and consequences of satisfaction Decisions. *Journal of Marketing research , 17*, 460-9.

Oppewal, H., & Vriens, M. (2000). Measuring service quality using integrated conjoint experiments. *International Journal of Bank marketing , 18* (4), 154-169.

Othman, A., & Owen, L. (2000). Adopting and measuring customer service quality in Islamic banks:A case study in Kuwait. *International Journal of Islamic Financial services , 3* (1).

P.K.Agarwal, V. P. (2013). Comparative study of customer satisfaction in public and private sector Banks in India:A case study of Merrur region U.P. *Global Journal of Business management , 7* (1), 15-26.

Pal Manabendra, N., & Choudhary, K. (2009). Exploring the dimensionality of servicecquality: An application of TOPSIS in the banking industry. *Asia pacific Journal of Operational research , 26* (1), 115-123.

Palmer, A. (2005). *Principles of Service Marketing.* London: The McGraw-Hill Companies.

Panda, T. (2003). Creating customer lifetime value through effective CRM in financial service industry. *Journal of Services Research , 2* (2), 157-171.

Parsuraman, A., Zeithmal, V. A., Valerie, & Berry, L. L. (1996). *Services Marketing.* Newyork: Mcgrawhill Inc.

Parsuraman, A., Zeithmal, Valerie, & Berry, L. L. (1985). A conceptual model for future researchof service quality and its implications. *Journal of marketing , 49*, 41-50.

Parsuraman, Z. V. (1988). Servqual: A multiple item scale for measuring consumer perception of service quality. *Journal of retailing* , 12-37.

Patidar, G., & Verma, D. S. (2013). Comparison of service quality between Government and Private banks in Indore. *International journal of Engineering Trends and Technology* , 3073-3077.

Patnaik, U., & Chhatoi, B. (2006). *Bank Marketing.* New Delhi: Sonali Publication.

Perng, Y. (2007). A service quality improvement dynamic decision support system for refurbishment contractors. *Total Quality Management and Business Excellance , 18* (7), 731-749.

Polit, D. F., & Beck, C. T. (2006). The content validity index: Are you sure you know what's being reported? Critique and Recommendations. *Research in Nursing and Health , 29,* 489-497.

Prabhakaran, S., & Satya, S. (2003). An insight into service attributes in banking sector. *Journal of services research , 3* (1), 157-169.

Qasemi, B., & Khosravi, A. (2014). *The study of the relationship between customers' trust and satisfaction on the financial performance of Qavamin bank.* Tehran: Islamic Azad University.

Radon, G. (1987). Quality Service- A Low cost Profit Strategy. *Bank Marketing , 19* (9), 10-12.

Rapert, M. I., & Wren, B. M. (1998). Service Quality as a competitive opportunity. *Journal of service marketing , 12* (3), 223-235.

Rathee, R. (2014). To identify service quality gaps in banking sector: a study of private banks. *International journal of emerging research in management & technology , 3* (7), 1-6.

Razak, R. M., Chong, C. S., & Lin, B. (2007). Service Quality of a local Malaysian Bank:Customers' Expectations,Perceptions,Satisfaction and Loyalty. *International Journal os services and standards , 3* (1), 18-38.

Regasamy, E., & Kumar, V. (2005). A comparative study on service quality and customer satisfaction among private, Public and foreign banks. *JIM Quest* .

Riecheld, F., & Sasser, W. (1990). Zero defections come to services. *Harward Business Review , 68* (5), 105-111.

Rootman, C. (2006). The influence of customer relationship management on service quality of banks. *Nelson Mandela Metropolitan University* .

Rust, R. T., & Oliver, R. L. (1994). *Service Quality:Insights and implications from Frontier Sevice quality.* Sage Publications.

S P Singh, S. K. (2011). Analysis of service quality gap and customer satisfaction in private banks. *Gurukul business review* , 13-18.

S.Saravathi. (2011). perception of customers on the performance of private banks- A study with SERVQUAL. *International journal of management and business studies* , 95-99.

S.Sivesan. (2010). Service quality and customer satisfaction: a case study - Banking sectors in Jaffna District Srilanka. *International journal of marketing, financial sevices & Manangement Research* , 1-09.

Saghier, N. E., & Nathan, D. (2013). Service quality dimensions and customers' satisfaction of Banks in Egypy. *20th International research Conference.*

sahar sami, m. g. (2012). The measurement of service qualityby using SERVQUAL and quality gap model. *indian journal of science and technology* .

Santhiyavalli, G. (2011). Customers' perception of service quality of State bank of India- A factor analysis. *International Journal of management and Business studies , 1*, 78-84.

Saraswathi, S. (2011). perception of customers on the performance of the private banks - a study with Servqual. *International Journal of mnagement & Business studies* , 95-99.

Saravanakumar, G., & Jayakrishnan, J. (2013). Service Quality of Banks-An empirical study. *Research Journal of Social Science and management , 3* (8).

Saravanan, S. (2004). Service marketing strategies for the new millennium in banking sector. *Indian Journal of marketing , 34* (8), 33-39.

Shanka, M. S. (2012). Bank service quality, Customer satisfaction and loyalty in Ethiopian banking sector. *Journal of business administration and mnangement science research , 1* (1), 1-9.

Shemwell, D., Yavas, U., & Bilgin, Z. (1998). Customer-Service provider relationship:An empirical test of a model of service quality,satifaction and relationship oreinted. *International Journal of Service Industry Management , 9* (2), 155-168.

Siddiqi, K. (2011). Interrelations between service quality attributes, customer satisfaction and customer loyalty in thye retail Banking sector in Bangladesh. *International Journal of Business and Management , 6* (3), 12-36.

Silva, V. D. (2009). *Association of bankers of Srilanka* .

Singh, S., & Khurana, S. (2011). Analysis of Service quality gaps and customer satisfaction in private banks in Insdia. *Research Gate* , 21-34.

Sousa Poza, A., & Souza Poza, A. (2000). Taking another look at the gender and satisfaction paradox. *Kyklos, Wiley Blackwell , 53* (2), 135-152.

Spathis, C., Petriduo, E., & Glaveli, N. (2004). Managing service quality in banks: Customers' gender effects. *Managing service quality , 14* (1), 90-102.

Spreng, R., & Mackoy, R. (1996). An empirical examinationof a model of perceived service quality and satisfaction. *Journal of retailing , 72* (2), 201-14.

Stafford, M. R. (1996). Demographic discriminators of service quality in t5he banking industry. *Journal of Service Marketing , 10* (4), 6-22.

Steiger, J. H., & Lind, J. M. (1980). Statistically based tests for number of factors. *Psychometric society.* Iowa City.

Storbacka, K., Strandvik, T., & Gronroos, C. (1994). Managing customer relationship for profit: the dynamics of relationship quality. *International Journal of Service Industry Management , 5* (5), 21-38.

Sudesh. (2007). Service quality in Banks- a Study in Haryana and Chandigarh. *NICE journal of business , 2* (1), 55-656.

Sulieman Ibrahim Shelash Al-Hawary, R. M. (2011). Banking service quality provided by commercial banks and cutomer satisfaction. *American Journal of Scietific research* (27), 68-83.

Sureshchander, G. S., Chandrasekharan, R., & Anantharaman, R. N. (2003). Customer perception of service quality in banking sector of a developing economy: a critical analysis. *International journal of bank marketing , 21* (5), 233-242.

Swar, B. N. (2011). A study of customer satisfaction and service quality Gaps in selected Private, Public & Foreign Banks. *SIES Journal of Management , 7* (2), 62-73.

Tariq, A., & Moussaoui, N. (2009). The main antecedants of customer loyalty on Morrocan banking industry. *International Journal of Business and Management science , 2* (2), 101-115.

Taylor, S. A., & Baker, T. L. (1994). An assessment of relationship between service quality and customer satisfaction in the formatio of consumers' purchase intentions. *Journal of Retailing , 70* (2), 163-178.

Tee, D. K., Preko, A., & Tee, E. (2018). Understanding the relationship between service quality, customer satisfaction and loyalty:An investigation of Ghana's retail banking sector. *British Journal of Marketing studies , 6* (2), 1-19.

Teeraj Sadeghi, A. B. (2011). Assessing the quality of banking services using Gap analysis model. *Asian journal of business studies* , 14-23.

Vanniarajan, T., & Subbash, B. K. (2011). Internal Service quality and its consequences in commercial banks: A Hr perspective. *Global management review , 6* (1), 42-57.

Vasanthi, T., & Gowri, D. (2013). Customer perception towards service quality Attributes of Public sector banks and private sector banks. *International journal of Scientific and Research publications , 3* (2), 01-09.

Veloutsou, C., Daskou, S., & Daskou, A. (2004). Are the determinants of Bank loyalty brand specific? *Journal of financial services marketing , 9* (2), 113-125.

Vesel, P., & Zabkar, V. (2009). Managing customer loyalty through the mediating role of satisfaction in the DIY retail outlet program. *Journal of retailing and customer service , 16*, 396-406.

Vriens, H. O. (2000). Measuring perceived service quality using integrated conjoint experiments. *International Journal of bank marketing , 18* (4), 154-169.

Wang, Y., Lo, H., & Hui, Y. (2003). The antecedants of service quality and product quality and their influences on bank reputation:Evidences from banking Industry in china. *Managing Service Quality , 13*, 72-83.

Westbrook, R. (1981). Sources of consumer satisfaction with retail Outlets. *Journal of Retailing , 57* (3), 68-85.

Wilson, J. H., & Keating, B. (2010). *Business Forecasting with Accompanying Excel Based Forecast Software* (5 ed.). New Delhi: Tata McGraw Hill Education Private Limited.

Winstanley, M. (1997). What drives customer satisfaction in commercial banking. *Commercial Lending Review , 12* (3), 36-42.

Yavas, U., Bilgin, Z., & Shemwell, D. J. (1997). Service quality in Banking Sector in an emerging economy: a consumer survey. *International Journal of bank marketing , 15* (6), 217-223.

Yavas, V., & Yasin, M. (2001). Enhancing organisational performance in banks a systematic approach. *Journal of Services Marketing , 6*, 444-453.

Zahra, T., & Edris, M. (2016). Studying the effects of service quality on financial performance through mediator influence of customer satisfaction and loyalty in banking industry. *International Journal of Humanities and cultural studies* (1), 119-135.

Zeithaml, V., Berry, L., & Parsuraman, A. (1996). The behavioural consequences of service quality. *Journal of Marketing , 60*, 31-46.

Zeithmal, V. (2000). Service quality delivery through websites: A critical review of extant knowledge. *Journal of the academy of marketing science , 30* (4), 362-375.

Zeithaml, V. A., Bitner, M. J., Gremler, D. D., & Pandit, A. (2008). *Services Marketing:Integrated Customer Focus Across the Firm* (8th ed.). New Delhi: McGraw-Hill.

Annexure

Implications of Service Quality Gaps and Customer Satisfaction on Customer Loyalty and Financial Performance of Public, Private and Multi State Co-Operative Banks In India

Respected Sir/Madam

I, Shri. Ashish M Joshi, Associate professor in Commerce working at MES College of Arts & Commerce, Zuarinagar-Goa, is carrying out my research on the topic service quality gaps and customer satisfaction on customer loyalty in banks as part of my Ph.D work. Kindly give your frank opinion for the questions and statements given below. The data collected will be used for research purpose only and the same will be kept confidential.

Questionnaire for Customers of the Bank

(Tick mark only the appropriate one)

Section- I

1) Name: _____

2) Name of the Bank: _____

3) Age: 18-30yrs ☐ 30-40yrs ☐ 40-50yrs ☐ 50yrs & above ☐

4) Gender: Male ☐ Female ☐

5) Place of Residence: Rural ☐ Urban ☐

6) Marital status: Married ☐ Unmarried ☐ Divorce ☐ Widow/Widower ☐

7) Monthly Income of Respondents:

Less than Rs10,000 ☐ Between Rs10,000-25,000 ☐
Between Rs 25,000-50,000 ☐ Between Rs50,000-1,00,000 ☐
Rs.1,00,000 and above ☐

8) Educational Qualifications

Up to SSC ☐ Up to HSSC ☐ Graduate ☐ Post Graduate ☐

Professional Qualification ☐

IX

9) Occupation:

Government Service ☐ Private Service ☐ Housewife ☐

Business ☐ Student ☐ Professional ☐

10) Frequency of using bank services

Daily ☐ Weekly ☐ Monthly ☐ Occasionally ☐ Rarely ☐

11) How long you are customer of the bank?

Less than 1 year ☐ between 1 to 5years ☐ between 5 to 10 years ☐ 10 years and above ☐

12) Rate the service quality of the bank as to what extent you are satisfied? (Rate from 1 to 5 scale from very poor to excellent)

1 2 3 4 5

13) Kindly rate the following services offered by your bank from 1-5(very poor to Excellent)

Services offered	**Very poor**	**Below Average**	**Average**	**Above Average**	**Excellent**	**Not Availed**
CREDIT CARD	1	2	3	4	5	6
DEBIT CARD	1	2	3	4	5	6
ATM	1	2	3	4	5	6
E-CHEQUES	1	2	3	4	5	6
NEFT/RTGS	1	2	3	4	5	6
TELE BANKING	1	2	3	4	5	6
INTERNET BANKING	1	2	3	4	5	6
MOBILE BANKING	1	2	3	4	5	6
DEMAT	1	2	3	4	5	6

Section- II (Expectation and perception of bank customers)

As a bank customer you have some expectations towards services provided/working environment of the bank and also availed services of the bank for a certain period of time. We would like to know your views on your experience with your bank before availing the service (expectation) and after availing the service (perception) on a scale from 1-5 (From strongly disagree to strongly agree), the number which you feel is closest to your opinion.

(Where SDA-strongly disagree, DA-disagree, U-uncertain, A-agree and SA-strongly agree)

Sr. No	**Statements**	**Expectations**					**Perceptions**				
		SDA	**DA**	**U**	**A**	**SA**	**SDA**	**DA**	**U**	**A**	**SA**
1	Bank has modern equipments for providing services.	1	2	3	4	5	1	2	3	4	5
2	Infrastructural facilities in the bank are visually appealing.	1	2	3	4	5	1	2	3	4	5
3	Employees of the bank are well dressed and appear neat.	1	2	3	4	5	1	2	3	4	5
4	Materials related to the service (such as pamphlets or brochures) are visually appealing.	1	2	3	4	5	1	2	3	4	5
5	Bank employees avoid disclosing information about the customer's transactions to others.	1	2	3	4	5	1	2	3	4	5
6	Bank employees deliver the work within a stipulated time period as promised by them.	1	2	3	4	5	1	2	3	4	5
7	Bank employees show sincere interest in solving customer's problems.	1	2	3	4	5	1	2	3	4	5
8	Bank employees deliver services to customers as early as possible.	1	2	3	4	5	1	2	3	4	5
9	The bank keeps its records accurately and up-to-date.	1	2	3	4	5	1	2	3	4	5
10	Bank provides error free records and statements.	1	2	3	4	5	1	2	3	4	5
11	Employees of the bank inform customers as and when services are performed	1	2	3	4	5	1	2	3	4	5
12	Employees of the bank are prompt in providing better services to the customers.	1	2	3	4	5	1	2	3	4	5
13	Employees of the bank are readily willing to help customers.	1	2	3	4	5	1	2	3	4	5
14	Employees of the bank are never hesitant to respond to customer's request.	1	2	3	4	5	1	2	3	4	5
15	Employees of the bank constantly communicate with the customers.	1	2	3	4	5	1	2	3	4	5
16	Method of communication used by the bank employees suits the requirements of the customers	1	2	3	4	5	1	2	3	4	5
17	Customers can trust employees of the bank.	1	2	3	4	5	1	2	3	4	5

18	Employees of the bank give proper guidance to the customers.	1	2	3	4	5	1	2	3	4	5
19	The transactions with your bank are safe and secure.	1	2	3	4	5	1	2	3	4	5
20	Employees of the bank are polite with you.	1	2	3	4	5	1	2	3	4	5
21	Employees of the bank have required knowledge to render services to customers.	1	2	3	4	5	1	2	3	4	5
22	Employees of the bank give accurate presentation of services.	1	2	3	4	5	1	2	3	4	5
23	Behaviour of employees of the bank instils confidence in the customers.	1	2	3	4	5	1	2	3	4	5
24	Customers of the bank are given individual attention.	1	2	3	4	5	1	2	3	4	5
25	Operating hours of the bank are convenient to the customers.	1	2	3	4	5	1	2	3	4	5
26	The bank understands specific needs of the customers.	1	2	3	4	5	1	2	3	4	5
27	The bank is open to complaints and criticism of the customers.	1	2	3	4	5	1	2	3	4	5
28	The bank employees respond positively to customer complaints.	1	2	3	4	5	1	2	3	4	5
29	Employees are always willing to clear the doubts of the customers.	1	2	3	4	5	1	2	3	4	5
30	The bank employees have customers' best interest at heart.	1	2	3	4	5	1	2	3	4	5
31	The banker provides a wide range of modern services to the customers from time-to-time.	1	2	3	4	5	1	2	3	4	5
32	Bank offers user-friendly technological services to its customers.	1	2	3	4	5	1	2	3	4	5
33	Personal accounts are updated from time-to-time and can be accessed through internet and ATMs.	1	2	3	4	5	1	2	3	4	5
34	Bank website offers financial records and information of customers.	1	2	3	4	5	1	2	3	4	5
35	Bank offers modern banking facilities to the customers 24*7 and hassle free.	1	2	3	4	5	1	2	3	4	5

Section- III (Perception of bank customers)

Please indicate your views on your experience with your banker by circling on a scale from 1-5 (From strongly disagree to strongly agree), the number which you feel is closest to your opinion.

Sr.No.	Statements	Strongly Disagree	Dis agree	Un certain	agree	Strongly Agree
1	I am fully satisfied with variety of services offered by the bank.	1	2	3	4	5
2	I am fully satisfied with safety	1	2	3	4	5

	and security measures taken by the bank.					
3	Services offered by the bank create value for money.	1	2	3	4	5
4	Bank constantly provides good facilities for the betterment of its customers.	1	2	3	4	5
5	The services provided to the customers are very effective and efficient.	1	2	3	4	5
6	I would like to receive services from the same bank.	1	2	3	4	5
7	The price paid and services received by me are justified	1	2	3	4	5
8	I do not intend to change the bank on account of better service quality.	1	2	3	4	5
9	I would support my bank consistently.	1	2	3	4	5
10	I will recommend the name of my bank to my friends and relatives due to its quality service.	1	2	3	4	5

Content Validity (Clarity)

Sr. No.	**Items**	**EXPERTS**						**I-CVI 0.78**
		1	**2**	**3**	**4**	**5**	**6**	
Instructions to Raters		**4**	**4**	**4**	**4**	**4**	**4**	1
Servqual index for service quality								
1	Bank has modern equipments for providing services.	**4**	**4**	**4**	**1**	**4**	**4**	0.83
2	Infrastructural facilities in the bank are visually appealing.	**4**	**3**	**4**	**4**	**4**	**3**	1
3	Employees of the bank are well dressed and appear neat.	**4**	**4**	**4**	**1**	**4**	**4**	0.83
4.	Materials related to the service (such as pamphlets or brochures) are visually appealing.	**4**	**3**	**3**	**4**	**4**	**4**	1
5.	Bank employees avoid disclosing information about the customer's transactions to others.	**4**	**4**	**3**	**2**	**4**	**3**	0.83
6	Bank employees deliver the work within a stipulated time period.	**4**	**4**	**3**	**4**	**4**	**4**	1
7	Bank employees show sincere interest in solving customer's problems.	**4**	**3**	**3**	**4**	**4**	**4**	1

8	Bank employees deliver services to customers as early as possible.	**4**	**4**	**4**	**4**	**4**	**4**	1
9	The bank keeps its records accurately and up-to-date.	**4**	**4**	**4**	**4**	**4**	**4**	1
10	Bank provides error free records and statements.	**4**	**4**	**4**	**4**	**4**	**4**	1
11	Employees of the bank inform customers as and when services are performed	**4**	**4**	**4**	**4**	**4**	**4**	1
12	Employees of the bank are prompt in providing better services to the customers.	**4**	**4**	**4**	**2**	**4**	**3**	0.83
13	Employees of the bank are readily willing to help customers.	**4**	**4**	**4**	**4**	**4**	**4**	1
14	Employees of the bank are never hesitant to respond to customer's request.	**4**	**4**	**4**	**4**	**4**	**4**	**1**
15	Employees of the bank constantly communicate with the customers.	**4**	**4**	**4**	**3**	**4**	**4**	**1**
16	Method of communication used by the bank employees suits the requirements of the customers	**4**	**3**	**3**	**4**	**4**	**4**	**1**
17	Customers can trust employees of the bank.	**4**	**4**	**4**	**4**	**4**	**4**	**1**
18	Employees of the bank give proper guidance to the customers.	**4**	**4**	**3**	**4**	**4**	**4**	**1**
19	The transactions with your bank are safe and secure.	**4**	**4**	**3**	**4**	**4**	**4**	**1**
20	Employees of the bank are polite with you.	**4**	**3**	**4**	**4**	**4**	**4**	**1**
21	Employees of the bank have required knowledge to render services to customers.	**4**	**4**	**4**	**4**	**4**	**4**	**1**
22	Employees of the bank give accurate presentation of services.	**4**	**4**	**3**	**4**	**4**	**4**	**1**
23	Behaviour of employees of the bank instils confidence in the customers.	**4**	**3**	**4**	**4**	**4**	**3**	**1**
24	Customers of the bank are given individual attention.	**4**	**4**	**4**	**4**	**4**	**4**	**1**
25	Operating working hours of the bank are convenient to the customers.	**4**	**4**	**4**	**4**	**4**	**4**	**1**
26	The bank understands specific needs of the customers.	**4**	**4**	**4**	**4**	**4**	**4**	**1**
27	The bank is open to complaints and criticism of the customers.	**4**	**4**	**4**	**4**	**4**	**4**	**1**

28	The bank employees respond positively to customer complaints.	**4**	**4**	**4**	**4**	**4**	**4**	**1**
29	Employees are always willing to clear the doubts of the customers.	**4**	**4**	**4**	**4**	**4**	**4**	**1**
30	The bank employees have customers' best interest at heart.	**4**	**4**	**4**	**2**	**4**	**3**	**0.83**
31	The banker provides a wide range of modern services to the customers from time-to-time.	**4**	**4**	**4**	**3**	**4**	**4**	**1**
32	Bank offers user-friendly technological services to its customers.	**4**	**3**	**4**	**4**	**4**	**4**	**1**
33	Personal accounts are updated from time-to-time and can be accessed through internet and ATMs.	**4**	**4**	**3**	**4**	**4**	**4**	**1**
34	Bank website offers financial records and information of customers.	**4**	**2**	**3**	**4**	**4**	**4**	**0.83**
35	Bank offers modern banking facilities to the customers 24*7 & hassle free	**4**	**4**	**4**	**3**	**4**	**4**	**1**
36	I am fully satisfied with variety of services offered by the bank.	**4**	**4**	**3**	**4**	**4**	**4**	**1**
37	I am fully satisfied with safety and security measures taken by the bank.	**4**	**4**	**4**	**4**	**4**	**4**	**1**
38	Services offered by the bank create value for money.	**4**	**4**	**3**	**4**	**4**	**3**	**1**
39	Bank constantly provides good facilities for the betterment of its customers.	**4**	**3**	**4**	**1**	**4**	**4**	**0.83**
40	The services provided to the customers are very effective and efficient.	**4**	**4**	**4**	**4**	**4**	**4**	**1**
41	I would like to receive services from the same bank.	**4**	**4**	**4**	**3**	**4**	**4**	**1**
42	The price paid and services received by me are justified	**4**	**3**	**3**	**3**	**4**	**4**	**1**
43	I do not intend to change the bank on account of better service quality.	**4**	**4**	**4**	**4**	**4**	**4**	**1**
44	I would support my bank consistently.	**4**	**3**	**4**	**3**	**4**	**4**	**1**
45	I will recommend the name of my bank to my friends and relatives due to its quality service.	**4**	**4**	**3**	**4**	**4**	**4**	**1**
	Total Relevant S-CVI/UA 0.80	**46**	**45**	**46**	**40**	**46**	**46**	
	S-CVI/Avg 0.80	**1**	**0.98**	**1**	**0.87**	**1**	**1**	**0.98**

Content Validity (Simplicity)

Sr. No.	Items	EXPERTS						I-CVI 0.78
		1	**2**	**3**	**4**	**5**	**6**	
Instructions to Raters		**4**	**4**	**4**	**4**	**4**	**4**	1
Servqual index for service quality								
1	Bank has modern equipments for providing services.	**4**	**4**	**4**	**1**	**4**	**4**	0.83
2	Infrastructural facilities in the bank are visually appealing.	**4**	**4**	**4**	**4**	**4**	**4**	1
3	Employees of the bank are well dressed and appear neat.	**4**	**4**	**4**	**1**	**4**	**4**	0.83
4.	Materials related to the service (such as pamphlets or brochures) are visually appealing.	**4**	**4**	**3**	**2**	**4**	**4**	0.83
5.	Bank employees avoid disclosing information about the customer's transactions to others.	**4**	**4**	**3**	**2**	**4**	**3**	0.83
6	Bank employees deliver the work within a stipulated time period.	**4**	**3**	**2**	**4**	**4**	**4**	0.83
7	Bank employees show sincere interest in solving customer's problems.	**4**	**3**	**4**	**4**	**4**	**4**	1
8	Bank employees deliver services to customers as early as possible.	**4**	**4**	**4**	**4**	**4**	**4**	1
9	The bank keeps its records accurately and up-to-date.	**4**	**4**	**4**	**4**	**4**	**4**	1
10	Bank provides error free records and statements.	**4**	**4**	**4**	**4**	**4**	**4**	1
11	Employees of the bank inform customers	**4**	**4**	**4**	**4**	**4**	**4**	1

	as and when services are performed							
12	Employees of the bank are prompt in providing better services to the customers.	**4**	**4**	**4**	**4**	**4**	**4**	1
13	Employees of the bank are readily willing t4o help customers.	**4**	**4**	**4**	**4**	**4**	**4**	1
14	Employees of the bank are never hesitant to respond to customer's request.	**4**	**4**	**4**	**4**	**4**	**4**	**1**
15	Employees of the bank constantly communicate with the customers.	**4**	**4**	**3**	**4**	**4**	**4**	**1**
16	Method of communication used by the bank employees suits the requirements of the customers	**4**	**4**	**3**	**4**	**4**	**4**	**1**
17	Customers can trust employees of the bank.	**4**	**4**	**3**	**4**	**4**	**4**	**1**
18	Employees of the bank give proper guidance to the customers.	**4**	**4**	**4**	**4**	**4**	**4**	**1**
19	The transactions with your bank are safe and secure.	**4**	**4**	**3**	**4**	**4**	**4**	**1**
20	Employees of the bank are polite with you.	**4**	**4**	**4**	**4**	**4**	**4**	**1**
21	Employees of the bank have required knowledge to render services to customers.	**4**	**4**	**4**	**4**	**4**	**4**	**1**
22	Employees of the bank give accurate presentation of services.	**4**	**4**	**3**	**4**	**4**	**4**	**1**
23	Behaviour of employees of the bank instils confidence in the customers.	**4**	**4**	**4**	**4**	**4**	**3**	**1**
24	Customers of the bank are given individual attention.	**4**	**4**	**4**	**4**	**4**	**4**	**1**
25	Operating working hours of the bank are convenient to the customers.	**4**	**4**	**4**	**4**	**4**	**4**	**1**
26	The bank understands specific needs of the customers.	**4**	**4**	**4**	**4**	**4**	**4**	**1**
27	The bank is open to complaints and criticism of the customers.	**4**	**4**	**4**	**4**	**4**	**4**	**1**
28	The bank employees respond positively to customer complaints.	**4**	**4**	**4**	**4**	**4**	**4**	**1**
29	Employees are always willing to clear the doubts of the customers.	**4**	**4**	**4**	**4**	**4**	**4**	**1**
30	The bank employees have customers' best interest at heart.	**4**	**4**	**4**	**4**	**4**	**3**	**1**

31	The banker provides a wide range of modern services to the customers from time-to-time.	**4**	**4**	**3**	**3**	**4**	**4**	**1**
32	Bank offers user-friendly technological services to its customers.	**4**	**4**	**4**	**3**	**4**	**4**	**1**
33	Personal accounts are updated from time-to-time and can be accessed through internet and ATMs.	**4**	**4**	**3**	**4**	**4**	**4**	**1**
34	Bank website offers financial records and information of customers.	**4**	**4**	**4**	**4**	**4**	**4**	**1**
35	Bank offers modern banking facilities to the customers 24*7 & hassle free	**4**	**4**	**3**	**3**	**4**	**4**	**1**
36	I am fully satisfied with variety of services offered by the bank.	**4**	**4**	**4**	**4**	**4**	**4**	**1**
37	I am fully satisfied with safety and security measures taken by the bank.	**4**	**4**	**4**	**4**	**4**	**4**	**1**
38	Services offered by the bank create value for money.	**4**	**4**	**4**	**4**	**4**	**3**	**1**
39	Bank constantly provides good facilities for the betterment of its customers.	**4**	**4**	**4**	**1**	**4**	**4**	**0.83**
40	The services provided to the customers are very effective and efficient.	**4**	**4**	**4**	**4**	**4**	**4**	**1**
41	I would like to receive services from the same bank.	**4**	**4**	**4**	**3**	**4**	**4**	**1**
42	The price paid and services received by me are justified	**4**	**4**	**4**	**4**	**4**	**4**	**1**
43	I do not intend to change the bank on account of better service quality.	**4**	**4**	**4**	**4**	**4**	**4**	**1**
44	I would support my bank consistently.	**4**	**4**	**4**	**4**	**4**	**4**	**1**
45	I will recommend the name of my bank to my friends and relatives due to its quality service.	**4**	**4**	**4**	**4**	**4**	**4**	**1**
	Total Relevant S-CVI/UA 0.80	**46**	**46**	**45**	**41**	**46**	**46**	
	S-CVI/Avg 0.80	**1**	**1**	**0.98**	**0.89**	**1**	**1**	**0.98**

Content Validity (Relevance)

Sr. No.	Items	EXPERTS						I-CVI 0.78
		1	2	3	4	5	6	
Instructions to Raters		**4**	**4**	**4**	**4**	**4**	**4**	1
Servqual index for service quality								
1	Bank has modern equipments for providing services.	**4**	**4**	**4**	**4**	**4**	**4**	1
2	Infrastructural facilities in the bank are visually appealing.	**4**	**4**	**4**	**4**	**4**	**3**	1
3	Employees of the bank are well dressed and appear neat.	**4**	**4**	**4**	**4**	**4**	**4**	1
4.	Materials related to the service (such as pamphlets or brochures) are visually appealing.	**4**	**4**	**4**	**4**	**4**	**4**	1
5.	Bank employees avoid disclosing information about the customer's transactions to others.	**4**	**4**	**4**	**4**	**4**	**3**	1
6	Bank employees deliver the work within a stipulated time period.	**4**	**4**	**4**	**4**	**4**	**4**	1
7	Bank employees show sincere interest in solving customer's problems.	**4**	**4**	**4**	**3**	**4**	**4**	1
8	Bank employees deliver services to customers as early as possible.	**4**	**4**	**4**	**1**	**4**	**4**	0.83
9	The bank keeps its records accurately and up-to-date.	**4**	**4**	**4**	**4**	**4**	**4**	1
10	Bank provides error free records and statements.	**4**	**4**	**4**	**4**	**4**	**4**	1
11	Employees of the bank inform customers as and when services are performed	**4**	**4**	**4**	**3**	**4**	**4**	1
12	Employees of the bank are prompt in providing better services to the customers.	**4**	**4**	**4**	**4**	**4**	**4**	1
13	Employees of the bank are readily willing to help customers.	**4**	**4**	**4**	**4**	**4**	**4**	1
14	Employees of the bank are never hesitant to respond to customer's request.	**4**	**4**	**4**	**4**	**4**	**4**	**1**

15	Employees of the bank constantly communicate with the customers.	**4**	**4**	**4**	**3**	**4**	**4**	**1**
16	Method of communication used by the bank employees suits the requirements of the customers	**4**	**4**	**3**	**4**	**4**	**4**	**1**
17	Customers can trust employees of the bank.	**4**	**4**	**4**	**4**	**4**	**4**	**1**
18	Employees of the bank give proper guidance to the customers.	**4**	**4**	**4**	**4**	**4**	**4**	**1**
19	The transactions with your bank are safe and secure.	**4**	**4**	**3**	**4**	**4**	**4**	**1**
20	Employees of the bank are polite with you.	**4**	**4**	**4**	**4**	**4**	**4**	**1**
21	Employees of the bank have required knowledge to render services to customers.	**4**	**4**	**4**	**4**	**4**	**4**	**1**
22	Employees of the bank give accurate presentation of services.	**4**	**4**	**4**	**4**	**4**	**4**	**1**
23	Behaviour of employees of the bank instils confidence in the customers.	**4**	**4**	**4**	**4**	**4**	**3**	**1**
24	Customers of the bank are given individual attention.	**4**	**4**	**4**	**4**	**4**	**4**	**1**
25	Operating working hours of the bank are convenient to the customers.	**4**	**3**	**4**	**2**	**4**	**4**	**0.83**
26	The bank understands specific needs of the customers.	**4**	**4**	**4**	**4**	**4**	**4**	**1**
27	The bank is open to complaints and criticism of the customers.	**4**	**4**	**4**	**4**	**4**	**4**	**1**
28	The bank employees respond positively to customer complaints.	**4**	**3**	**4**	**4**	**4**	**4**	**1**
29	Employees are always willing to clear the doubts of the customers.	**4**	**4**	**4**	**4**	**4**	**4**	**1**
30	The bank employees have customers' best interest at heart.	**4**	**4**	**4**	**4**	**4**	**3**	**1**
31	The banker provides a wide range of modern services to the customers from time-to-time.	**4**	**4**	**4**	**3**	**4**	**4**	**1**
32	Bank offers user-friendly technological services to its customers.	**1**	**4**	**4**	**3**	**4**	**4**	**0.83**
33	Personal accounts are updated from time-to-time and can be accessed through internet and ATMs.	**3**	**4**	**4**	**1**	**4**	**4**	**0.83**

34	Bank website offers financial records and information of customers.	**1**	**3**	**4**	**4**	**4**	**4**	**0.83**
35	Bank offers modern banking facilities to the customers 24*7 & hassle free	**3**	**3**	**3**	**3**	**4**	**4**	**1**
36	I am fully satisfied with variety of services offered by the bank.	**4**	**4**	**4**	**4**	**4**	**4**	**1**
37	I am fully satisfied with safety and security measures taken by the bank.	**4**	**4**	**4**	**4**	**4**	**4**	**1**
38	Services offered by the bank create value for money.	**4**	**4**	**4**	**3**	**4**	**3**	**1**
39	Bank constantly provides good facilities for the betterment of its customers.	**4**	**4**	**4**	**4**	**4**	**4**	**1**
40	The services provided to the customers are very effective and efficient.	**4**	**4**	**4**	**3**	**4**	**4**	**1**
41	I would like to receive services from the same bank.	**4**	**4**	**4**	**4**	**4**	**4**	**1**
42	The price paid and services received by me are justified	**4**	**3**	**4**	**4**	**4**	**4**	**1**
43	I do not intend to change the bank on account of better service quality.	**4**	**4**	**4**	**4**	**4**	**4**	**1**
44	I would support my bank consistently.	**4**	**4**	**4**	**4**	**4**	**4**	**1**
45	I will recommend the name of my bank to my friends and relatives due to its quality service.	**4**	**4**	**4**	**4**	**4**	**4**	**1**
	Total Relevant S-CVI/UA 0.80	**44**	**46**	**46**	**43**	**46**	**46**	
	S-CVI/Avg 0.80	**0.96**	**1**	**1**	**0.93**	**1**	**1**	**0.98**

Papers Published

- Joshi, Ashish. M., & Sankaranarayanan, K.G. (2014) Service Quality Gaps and Customer Satisfaction among Banks-A Study of Selected Public and Private Sector Banks, Radix International Journal of Research in Social Science,(RIJRSS) 3(6), 1-12
- Joshi, Ashish. M., & Sankaranarayanan, K.G. (2015) Service Quality and Customer Satisfaction among Selected State Cooperative & Multi-State Cooperative Banks in Goa - A Study, International Journal of Science and Research (IJSR), 5(11),738-743.
- Joshi, Ashish. M., & Sankaranarayanan, K.G. (2016)Performance Evaluation of Public Sector, Private Sector and Multistate Cooperative Banks in India- A Study, International Journal of Science and Research (IJSR) 5 (11), 744-751.
- Joshi, Ashish. M., & Sankaranarayanan, K.G. (2018) Measuring Financial Performance of Selected Banks using Camel Model, International Journal of Research and Analytical Reviews (IJRAR), 5(4), 922-928, **UGC No. 43602**.
- Joshi, Ashish. M., & Sankaranarayanan, K.G. (2018) Impact of Service Quality on Satisfaction Levels of the Customers of Selected Banks, International Journal of Research and Analytical Reviews (IJRAR), 5(4) 244-249, **UGC No. 43602**.
- Joshi, Ashish. M., & Sankaranarayanan, K.G. (2019) Implications of service quality on customer satisfaction, loyalty and performance of selected banks, ZENITH International Journal of Multidisciplinary Research (ZIJMR), 9 (4), 152-161, **UGC No. 48877**.